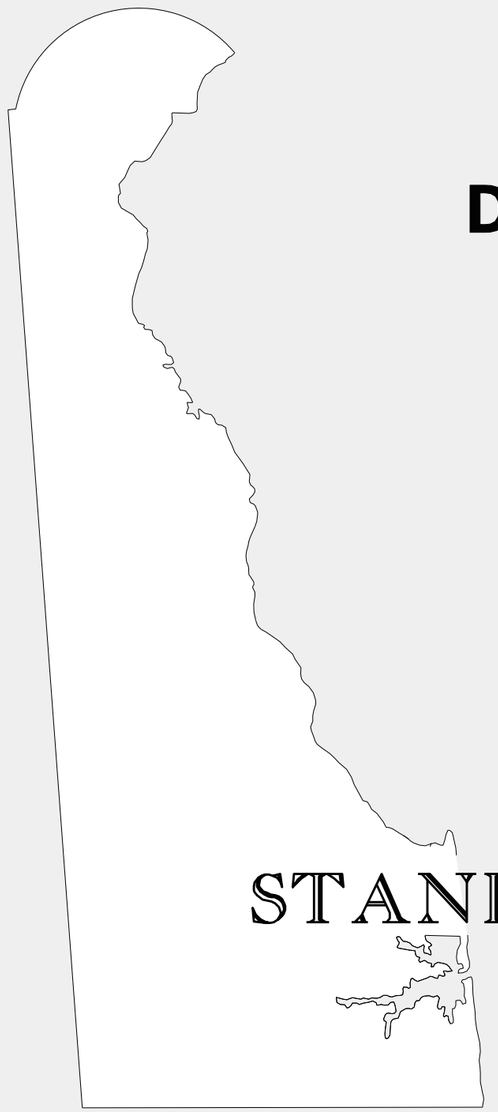

THE STATE OF DELAWARE
DEPARTMENT OF TRANSPORTATION

STANDARD CONSTRUCTION DETAILS

DESIGN VALUES ARE PRESENTED IN THIS DOCUMENT IN BOTH METRIC AND U.S. CUSTOMARY UNITS AND WERE DEVELOPED INDEPENDENTLY WITHIN EACH SYSTEM. THE RELATIONSHIP BETWEEN THE METRIC AND U.S. CUSTOMARY VALUES IS NEITHER AN EXACT (SOFT) CONVERSION NOR A COMPLETELY RATIONALIZED (HARD) CONVERSION. THE METRIC VALUES ARE THOSE THAT WOULD HAVE BEEN USED HAD THIS DOCUMENT BEEN PRESENTED EXCLUSIVELY IN METRIC UNITS; THE U.S. CUSTOMARY VALUES ARE THOSE THAT WOULD HAVE BEEN USED IF THIS DOCUMENT HAD BEEN PRESENTED EXCLUSIVELY IN U.S. CUSTOMARY UNITS. THEREFORE, THE USER IS ADVISED TO WORK COMPLETELY IN ONE SYSTEM AND NOT ATTEMPT TO CONVERT DIRECTLY BETWEEN THE TWO.

II/26/2007

SECTION I - BARRIER

SHEET NO.	NAME
B-L (2001)	– BARRIER LEGEND
B-1	– GUARDRAIL APPLICATIONS
	(2004) - 1 PLANS - (TYPE 1, TYPE 2, AND TYPE 3)
	(2004) - 2 ELEVATIONS AND SPLICE DETAIL
	(2002) - 3 SECTION VIEWS
	(2007) - 4 GRADING FOR GUARDRAIL END TREATMENT, TYPE 1
	(2007) - 5 GRADING FOR GUARDRAIL END TREATMENT, TYPE 2
	(2007) - 6 GRADING FOR GUARDRAIL END TREATMENT, TYPE 3
B-2	– GUARDRAIL OVER CULVERTS
	(2009) - 1 GUARDRAIL OVER CULVERTS, TYPE 1
	(2009) - 2 GUARDRAIL OVER CULVERTS, TYPE 2
	(2009) - 3 GUARDRAIL OVER CULVERTS, TYPE 3
B-3 (2009)	– GUARDRAIL END TREATMENT, TYPE 4
B-4 (2007)	– CURVED GUARDRAIL SECTION
B-5 (2002)	– END ANCHORAGE
B-6	– BURIED END SECTION
	(2002) - 1 BURIED END SECTION
	(2002) - 2 BURRIED END SECTION
	(2002) - 3 POST, CONCRETE BLOCK, & RUBRAIL ANCHOR DETAILS
B-7	– GUARDRAIL TO BARRIER CONNECTION, APPROACH TYPE 1
	(2005) - 1 PLAN, ELEVATION, AND SECTIONS
	(2001) - 2 WOOD BLOCKOUT, RUB RAIL WOOD BLOCKS, BEARING PLATE, RUB RAIL TO BARRIER CONNECTION DETAILS
	(2001) - 3 BENT PLATE RUB RAIL DETAILS
B-8	– GUARDRAIL TO BARRIER CONNECTION, APPROACH TYPE 2
	(2005) - 1 PLAN, ELEVATION, AND SECTIONS
	(2001) - 2 BENT RAIL DETAILS, BLOCK SCHEDULE
B-9 (2002)	– GUARDRAIL TO BARRIER CONNECTION, EXIT TYPE
B-10 (2004)	– BRIDGE RAIL RETROFIT, TYPE 1
B-11	– BRIDGE RAIL RETROFIT, TYPE 2
	(2004) - 1 PLAN, SECTION
	(2001) - 2 BASE PLATE DETAIL AND STEEL GUARDRAIL POST
B-12 (2001)	– BRIDGE RAIL RETROFIT, TYPE 3
B-13	– HARDWARE
	(2004) - 1 W-BEAM DETAILS
	(2004) - 2 W-BEAM STEEL POST AND OFFSET BLOCK
	(2004) - 3 W-BEAM TERMINAL CONNECTOR
	(2004) - 4 THRIE BEAM DETAILS
	(2004) - 5 THRIE BEAM STEEL POST AND OFFSET BLOCK
	(2004) - 6 W-THRIE BEAM TRANSITION SECTION
	(2008) - 7 WOOD BLOCK, SOIL PLATE, SHORT WOOD BREAKAWAY POST, STEEL TUBE, LONG WOOD BREAKAWAY POST
	(2004) - 8 SWAGED CABLE AND RELATED HARDWARE ASSEMBLY
	(2004) - 9 GUARDRAIL REFLECTOR AND BEARING PLATE DETAIL
	(2004) - 10 GUARDRAIL BOLT & RECESSED NUT
	(2004) - 11 5/8" (16) HEX BOLT, HEX NUT, & STEEL WASHER, HIGH-STRENGTH STRUCTURAL HEX BOLT & HEX NUT
	(2004) - 12 15/16" (24) HEX NUT & STEEL WASHER, 5/8" (16) CARRIAGE BOLT
	(2005) - 13 GUARDRAIL MOUNTED RAIL

SECTION I - BARRIER (CONT'D)

SHEET NO. NAME

B-14 — CONCRETE SAFETY BARRIER (F SHAPE)
(2009) - 1 32" (960) - TYPICAL CAST-IN-PLACE OR SLIP FORM CONSTRUCTION
(2009) - 2 32" (960) - TYPICAL PRE-CAST CONSTRUCTION
(2009) - 3 42" (1050) - TYPICAL CAST-IN-PLACE OR SLIP FORM CONSTRUCTION
(2009) - 4 SLOTTED PLATE CONNECTION DETAILS
B-15 — PORTABLE CONCRETE SAFETY BARRIER (F SHAPE)
~~(2008) - 1 PLAN, ELEVATION, AND SECTION VIEW~~ •DETAIL DELETED - SEE SPECIFICATIONS•
~~(2008) - 2 CURVE SECTION~~ •DETAIL DELETED - SEE SPECIFICATIONS•
~~(2008) - 3 TAPERED END SECTION~~ •DETAIL DELETED - SEE SPECIFICATIONS•
~~(2008) - 4 TYPICAL REINFORCEMENT DETAILS~~ •DETAIL DELETED - SEE SPECIFICATIONS•
~~(2008) - 5 JOINT CONNECTION DETAILS~~ •DETAIL DELETED - SEE SPECIFICATIONS•

SECTION II - CURB & GUTTER

SHEET NO. NAME

C-1 (2009) — P.C.C. CURB, P.C.C. CURB & GUTTER, AND HOT-MIX CURB
C-2 — CURB RAMPS
(2008) - 1 TYPE 1
(2008) - 2 TYPES 2, 3, & 4
(2008) - 3 SECTIONS FOR TYPES 2, 3, & 4
(2006) - 4 TYPE 5
C-3 (2008) — ENTRANCES
C-4 — CURB OPENINGS
(2001) - 1 TYPES A, B, & C
(2001) - 2 TYPES D & E
(2001) - 3 TYPES F & G

SECTION III - DRAINAGE

SHEET NO. NAME

D-1 — 6:1 SAFETY END STRUCTURE
(2001) - 1 DETAIL VIEWS
(2001) - 2 SCHEDULES
D-2 — 10:1 SAFETY END STRUCTURE
(2001) - 1 DETAIL VIEWS
(2001) - 2 SCHEDULES
D-3 — SAFETY GRATES
(2005) - 1 SAFETY END STRUCTURE GRATE & ASSEMBLY DETAIL
(2007) - 2 PERSONNEL SAFETY GRATE FOR PIPE INLET DETAIL
D-4 (2009) — INLET BOX DETAILS
D-5 — DRAINAGE INLET DETAILS
(2009) - 1 DRAINAGE INLET ASSEMBLY
(2009) - 2 DRAINAGE INLET FRAME AND GRATES
(2009) - 3 DRAINAGE INLET TOP UNITS
(2009) - 4 DRAINAGE INLET COVER SLAB DETAILS
(2009) - 5 DOUBLE INLET COVER SLAB DETAILS
(2009) - 6 34" (865) x 24" (610) DRAINAGE INLET AND COVER SLAB DETAILS
(2009) - 7 34" (865) x 18" (455) DRAINAGE INLET DETAILS
(2009) - 8 DRAINAGE INLET TOP UNIT, TYPE S
~~(2002) - 9 LAWN INLET DETAIL~~ •DETAIL DELETED AND DETAILS COMBINED WITH DETAIL D-4, SHEET 1 OF 1•

SECTION III - DRAINAGE (CONT'D)

SHEET NO.	NAME
D-6	— MANHOLE DETAILS
(2009) - 1	BOX MANHOLE ASSEMBLY
(2001) - 2	ROUND MANHOLE ASSEMBLY
(2001) - 3	MANHOLE FRAME AND COVER
(2007) - 4	BOX MANHOLE COVER SLAB
D-7	— JUNCTION BOX DETAILS
(2009) - 1	JUNCTION BOX ASSEMBLY
(2007) - 2	JUNCTION BOX COVER SLAB
D-8 (2001)	— PIPE BEDDING
D-9 (2008)	— PERFORATED PIPE UNDERDRAIN
D-10 (2007)	— PIPE PLUGGING DETAIL

SECTION IV - EROSION

SHEET NO.	NAME
E-1 (2001)	— INCREMENTAL STABILIZATION
E-2 (2006)	— SILT FENCE
E-3 (2005)	— DRAINAGE INLET SEDIMENT CONTROL
E-4 (2001)	— CURB INLET SEDIMENT CONTROL
E-5 (2006)	— STONE CHECK DAM
E-6 (2005)	— SEDIMENT TRAP
E-7 (2005)	— SEDIMENT TRAP, USING DRAINAGE INLET AS OUTLET
E-8	— RISER PIPE ASSEMBLY FOR SEDIMENT TRAP
(2006) - 1	ELEVATION
(2006) - 2	TRASH HOOD DETAILS
E-9 (2005)	— EROSION CONTROL BLANKET APPLICATIONS
E-10 (2005)	— RIPRAP DITCH
E-11 (2005)	— TEMPORARY SWALE
E-12 (2005)	— PERIMETER DIKE/SWALE
E-13 (2005)	— EARTH DIKE
E-14 (2005)	— TEMPORARY SLOPE DRAIN
E-15 (2005)	— STILLING WELL
E-16 (2005)	— SUMP PIT, TYPE 1& 2
E-17 (2005)	— DEWATERING BASIN
E-18 (2005)	— GEOTEXTILE-LINED CHANNEL DIVERSION
E-19 (2005)	— SANDBAG DIVERSION
E-20 (2005)	— SANDBAG DIKE
E-21 (2005)	— STABILIZED CONSTRUCTION ENTRANCE
E-22 (2006)	— SKIMMER DEWATERING DEVICE
E-23	— TURBIDITY CURTAIN
(2005) - 1	FLOATING TURBIDITY CURTAIN
(2005) - 2	STAKED TURBIDITY CURTAIN
E-24 (2005)	— PORTABLE SEDIMENT TANK
E-25 (2005)	— TURF REINFORCEMENT MAT APPLICATIONS
E-26 (2006)	— RIPRAP ENERGY DISSIPATOR DETAIL

SECTION V - LANDSCAPING

SHEET NO. NAME

L-1 — PLANTING DETAILS

(2006) - 1 ROADSIDE SHRUB PLANTING DETAIL

(2006) - 2 TREE PLANTING DETAILS

(2006) - 3 PERENNIAL/GROUND COVER PLANTING DETAIL

SECTION VI - MISCELLANEOUS

SHEET NO. NAME

M-1 (2001) — RIGHT-OF-WAY FENCE

M-2 (2008) — CONCRETE MONUMENT

M-3 (2009) — BOLLARD & SHARED-USE PATH DETAILS

M-4 (2007) — BIKE RACK

M-5 (2004) — WOOD RAIL FENCE

M-6 (2004) — PATTERNED HOT-MIX OR CONCRETE & BRICK PAVER

M-7 (2006) — CHAIN LINK FENCE DETAILS

M-8 (2007) — P.C.C. PARKING BUMPER

SECTION VII - PAVEMENT

SHEET NO. NAME

P-1 — P.C.C. PAVEMENT

(2001) - 1 SLAB PLAN (WITH DOWEL AND TIE LOCATIONS)

(2004) - 2 JOINT AND SEALANT DETAILS

(2001) - 3 W BOLT, HOOK BOLT, DOWEL & TIE BAR

(2001) - 4 DOWEL SUPPORT BASKET

(2001) - 5 DOWEL & TIE BAR PLACEMENT TOLERANCES

P-2 — P.C.C. PAVEMENT PATCHING

(2008) - 1 FULL DEPTH PATCH, PLAN VIEW

(2008) - 2 FULL DEPTH PATCH, SECTION VIEWS

(2004) - 3 FULL DEPTH PATCH, SEALANT DETAILS, GROUT RETENTION DISK, AND DOWEL BAR

(2001) - 4 FULL DEPTH PATCH, DOWEL BAR PLACEMENT TOLERANCES

(2001) - 5 PARTIAL DEPTH PATCH, PLAN AND SECTION VIEWS

P-3 (2009) — BUTT JOINT DETAILS

SECTION VIII - TRAFFIC

SHEET NO. NAME

T-1 (2005) — CONDUIT JUNCTION WELL, TYPES 1,2, AND 3
T-2 (2005) — CONDUIT JUNCTION WELL, TYPE 4
T-3 (2005) — CONDUIT JUNCTION WELL, TYPE 5
T-4 (2005) — CABINET BASES (TYPES "M" AND "P")
T-5 — POLE BASES
(2005) - 1 ROUND BASE, SQUARE BASE
(2005) - 2 TYPICAL SECTION (BASES 1, 2, 2A, 2B, 3, 3A, 3B, AND 7), TYPICAL SECTION (BASE 4), TYPICAL INSTALLATION (BASES 1, 2, 2A, 2B, 3, 3A, 3B, 4, AND 7)
(2008) - 3 TYPICAL SECTION (BASES 5 AND 6), ANCHOR BOLT DATA CHART AND DETAILS
T-6 (2005) — SPECIAL POLE BASE
T-7 (2005) — SIGN FOUNDATION
T-8 (2005) — LOOP DETECTOR TO CONDUIT JUNCTION WELL CONNECTION
T-9 (2005) — TYPE "1 LOOP DETECTOR
T-10 (2005) — TYPE "2 LOOP DETECTOR
T-11 — MESSENGER WIRE ATTACHMENT
(2005) - 1 INTERMEDIATE MESSENGER WIRE ATTACHMENT ON WOOD POLES
(2005) - 2 ANGULAR INTERMEDIATE MESSENGER WIRE ATTACHMENT
T-12 — MESSENGER WIRE ATTACHMENT
(2005) - 1 SPAN WIRE ATTACHMENT BETWEEN POLES
(2005) - 2 DEAD END MESSENGER WIRE ATTACHMENT
T-13 — CONDUIT JUNCTION WELLS
(2005) - 1 TYPE 6
(2006) - 2 TYPE 7
(2006) - 3 TYPES 8 & 10
T-14 — EMERGENCY PREEMPTION RECEIVER
(2006) - 1 UPRIGHT MOUNT
(2005) - 2 INVERTED MOUNT
T-15 — BREAKAWAY SIGN POST AND PIN ASSEMBLY DETAILS

SCALE :

BARRIER LEGEND

ITEM NO.	DESCRIPTION
1	W-BEAM
2	W6 X 9 (W150 x 13.5) STEEL POST
3	WOOD OFFSET BLOCK
4	SPLICE - REQUIRES EIGHT(8) 5/8"(16) GUARDRAIL BOLTS (L=1 1/4"(35)) WITH RECESS NUTS, AND ONE(1) 5/8"(16) GUARDRAIL BOLT (L=10"(255)) WITH RECESS NUT.
5	W-BEAM TERMINAL CONNECTOR
6	5/8"(16) GUARDRAIL BOLT (L=1 1/4"(35)) AND RECESS NUT
7	5/8"(16) GUARDRAIL BOLT (L=10"(255)) AND RECESS NUT
8	5/8"(16) GUARDRAIL BOLT (L=10"(255)), STEEL WASHER, AND RECESS NUT
9	7/8"(22) HIGH STRENGTH STRUCTURAL HEX BOLT (L=VARIES) AND HEX NUT
10	5/8"(16) CARRIAGE BOLT (L=VARIES), STEEL WASHER, AND HEX NUT
11	BEARING PLATE

DELAWARE DEPARTMENT OF TRANSPORTATION	BARRIER LEGEND		APPROVED [signature] CHIEF ENGINEER 6/18/01 DATE
	STANDARD NO. B-L (2001)	SHT. 1 OF 1	RECOMMENDED [signature] DESIGN ENGINEER 6/15/01 DATE

02/21/2001

SCALE : N.T.S.

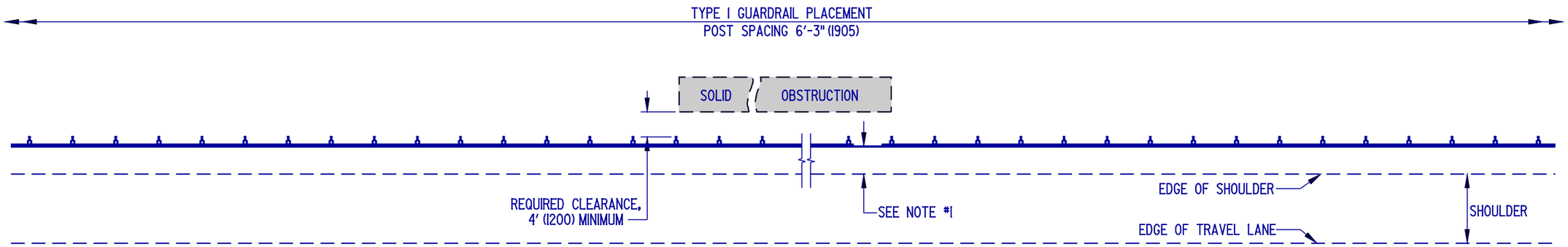

TYPE I GUARDRAIL

TYPICAL GUARDRAIL TREATMENT
WHEN THE REQUIRED 4' (1200) CLEARANCE TO OBSTRUCTION IS AVAILABLE

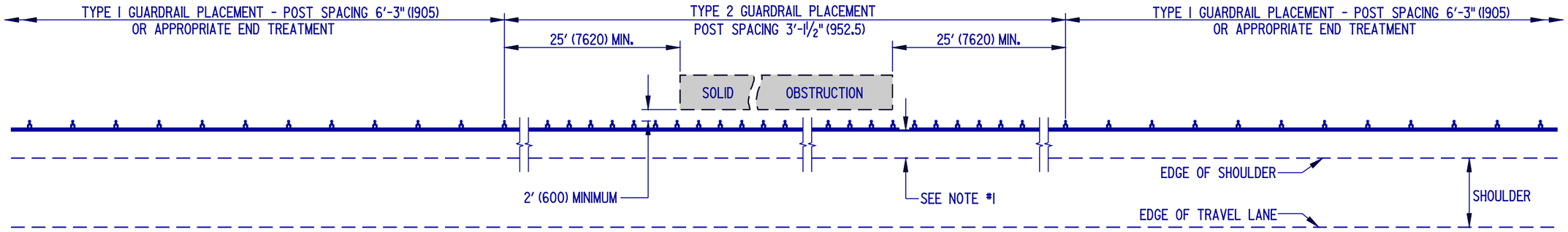

TYPE 2 GUARDRAIL

TYPICAL GUARDRAIL TREATMENT
WHEN 2' (600) TO 4' (1200) OF CLEARANCE TO OBSTRUCTION IS AVAILABLE

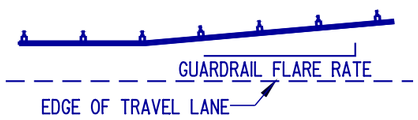

FLARE RATES	
DESIGN SPEED	FLARE RATE
70 MPH (110 km/h)	15:1
60 MPH (100 km/h)	14:1
55 MPH (90 km/h)	12:1
50 MPH (80 km/h)	11:1
45 MPH (70 km/h)	10:1
40 MPH (60 km/h)	9:1
30 MPH (50 km/h)	7:1

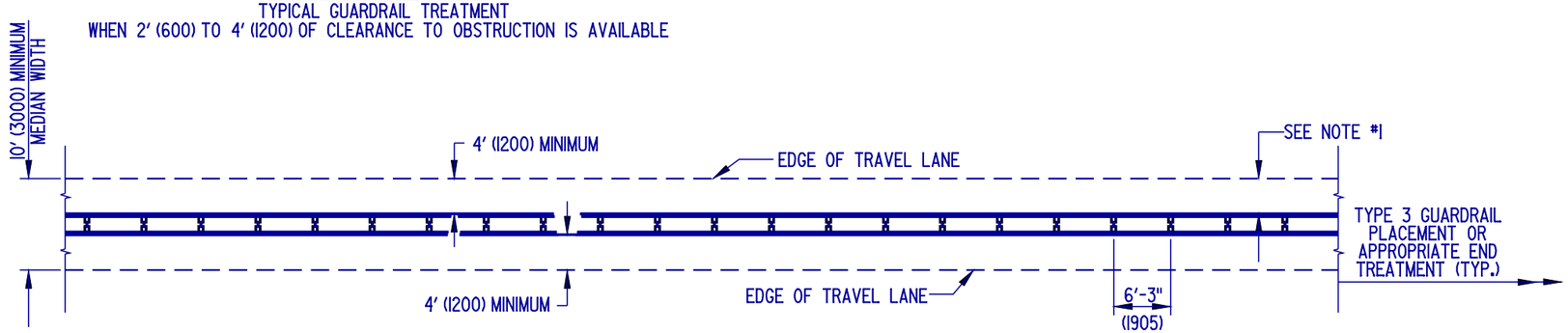

TYPE 3 GUARDRAIL

TYPICAL GUARDRAIL TREATMENT WHEN A MINIMUM OF
10' (3000) IS AVAILABLE FOR MEDIAN

NOTES : 1). THE DISTANCE FROM THE EDGE OF THE TRAVEL LANE OR SHOULDER TO THE FACE OF GUARDRAIL SHOULD BE MAXIMIZED. THIS AREA SHALL BE GRADED 10:1 OR FLATTER.

2). PLACE GUARDRAIL REFLECTOR EVERY FIFTH POST.

DELAWARE
DEPARTMENT OF TRANSPORTATION

GUARDRAIL APPLICATIONS

STANDARD NO. B-1 (2004) | SHT. 1 OF 6

APPROVED Carolann Wicks CHIEF ENGINEER 1/10/05 DATE

RECOMMENDED Dennis M. O'Toole DESIGN ENGINEER 1/3/05 DATE

12/08/2004

SCALE : N.T.S.

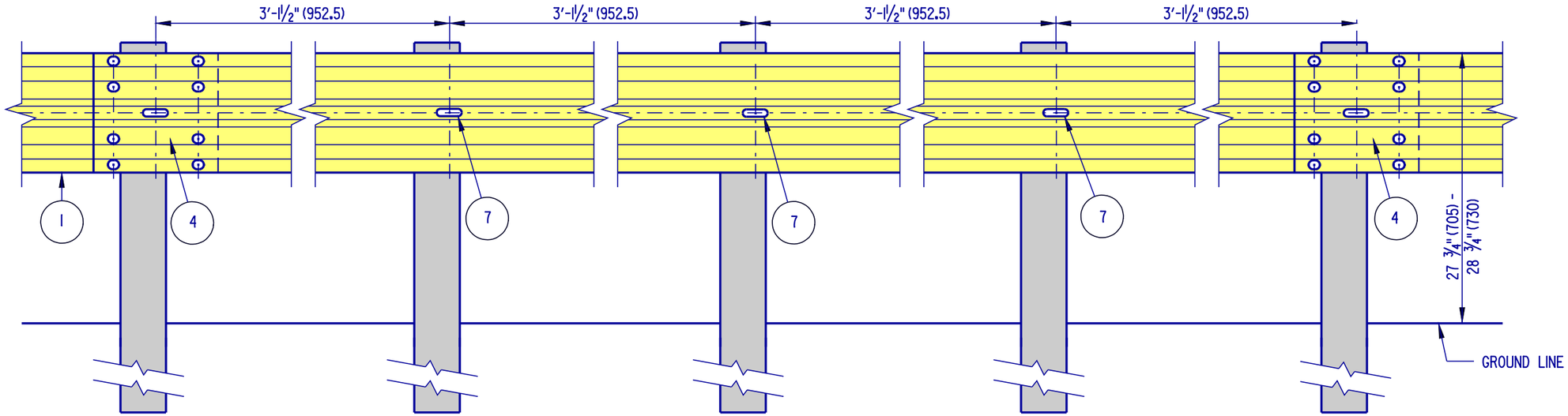

TYPE 2

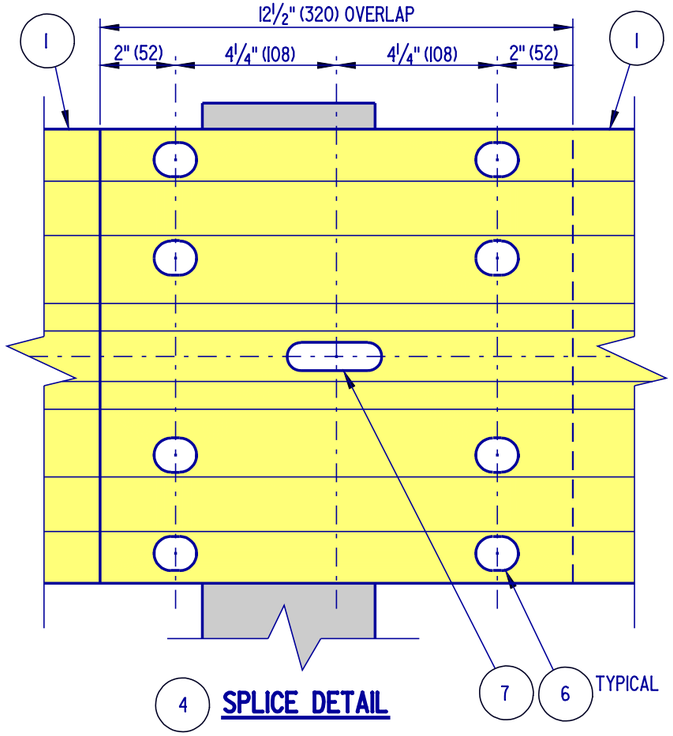

4 **SPLICE DETAIL**

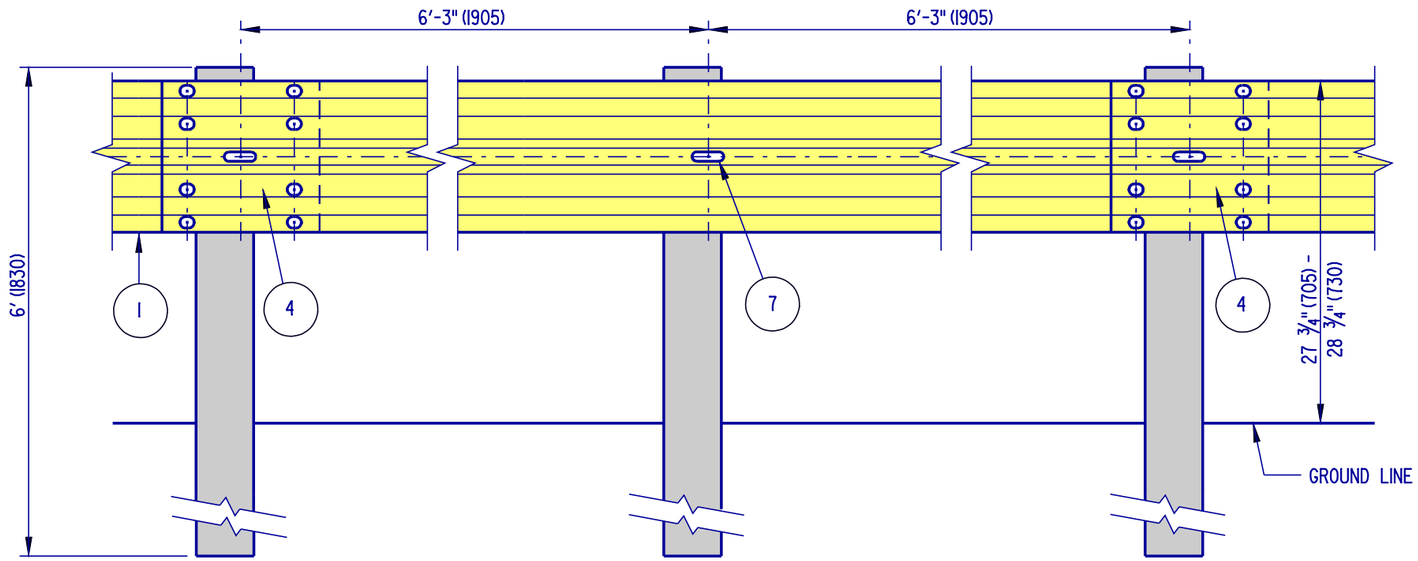

TYPE 1 OR 3

NOTE : OVERLAP W-BEAMS IN DIRECTION OF TRAVEL.

DELAWARE DEPARTMENT OF TRANSPORTATION	GUARDRAIL APPLICATIONS		APPROVED Carolann Wicks CHIEF ENGINEER 1/10/05 DATE
	STANDARD NO. B-1 (2004)	SHT. 2 OF 6	RECOMMENDED Dennis M. O'Toole DESIGN ENGINEER 1/3/05 DATE

08/24/2004

SCALE : N.T.S.

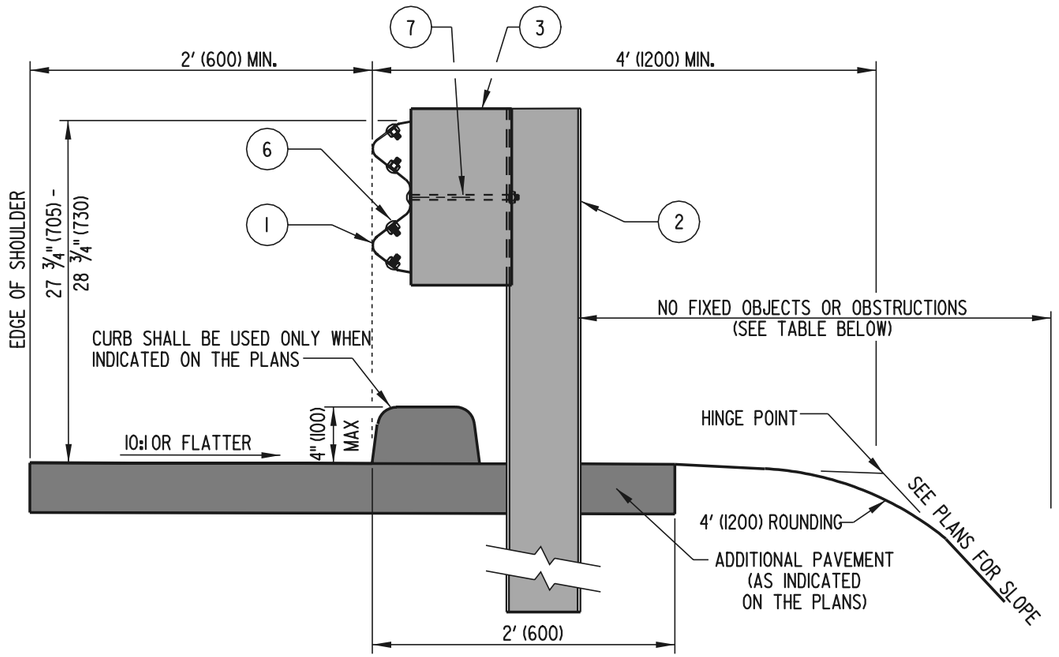

GUARDRAIL SECTION
(RURAL SHOULDER APPLICATION)

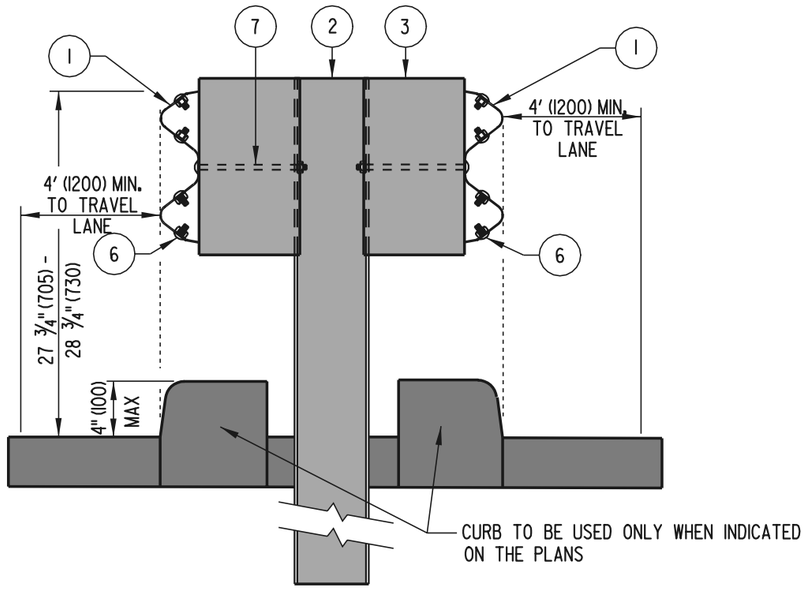

GUARDRAIL SECTION
(MEDIAN APPLICATION)

TYPE	POST SPACING	CLEAR AREA BEHIND POST
1	6' 3" (1905)	4' (1200) MIN
2	3' 1 1/2" (952.5)	2' (600) MIN

DESIGN SPEED	D
< 50 MPH (80 km/h)	6' (1800)
≥ 50 MPH (80 km/h)	10' (3000)

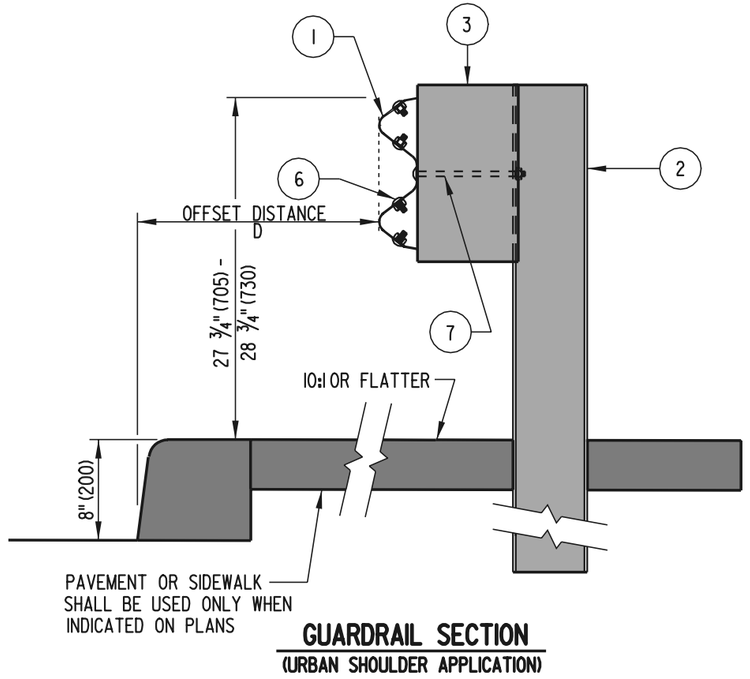

GUARDRAIL SECTION
(URBAN SHOULDER APPLICATION)

DELAWARE DEPARTMENT OF TRANSPORTATION	GUARDRAIL APPLICATIONS		
	STANDARD NO. B-1 (2002)	SHT. 3 OF 6	APPROVED Carolann Wicks CHIEF ENGINEER 9/6/02 DATE
			RECOMMENDED DESIGN ENGINEER 8/19/02 DATE

07/31/2002

SCALE : N.T.S.

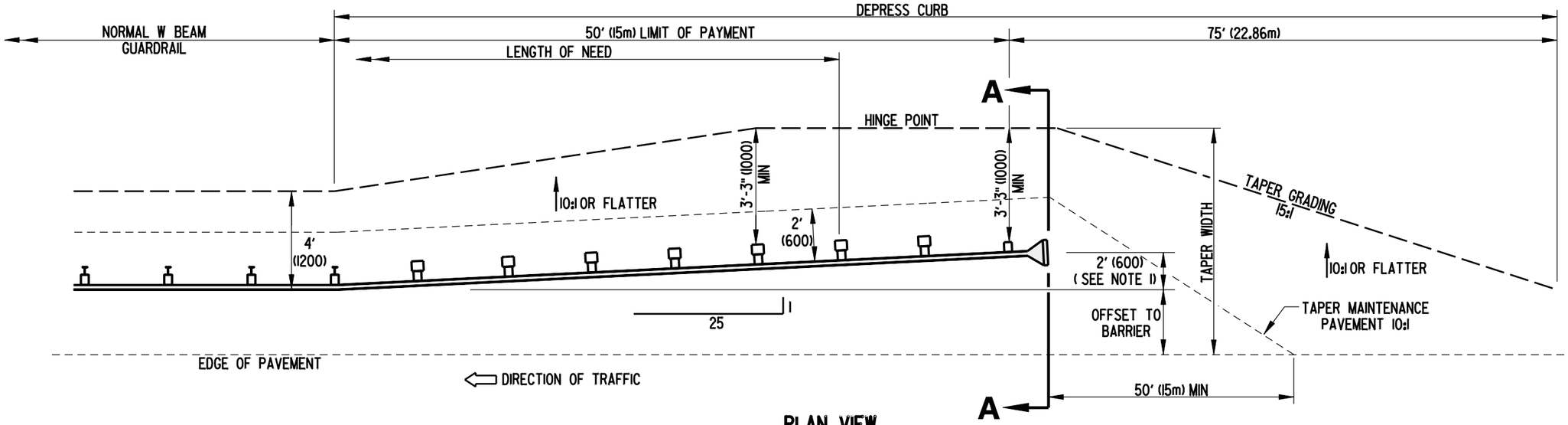

PLAN VIEW

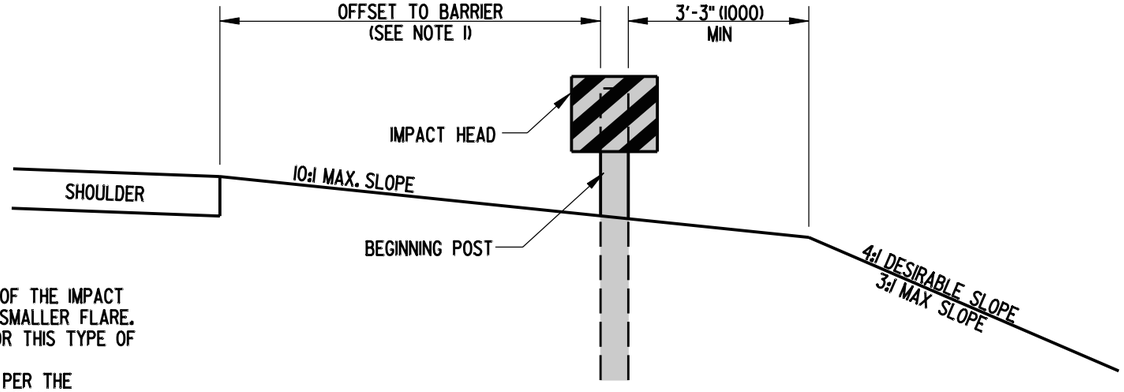

SECTION A-A

NOTES:

1. FLARE THE END TREATMENT AT 25:1 BEGINNING 50' (15 m) FROM THE END OF THE IMPACT HEAD, UNLESS THE CONSTRUCTION PLANS OR SPECIFICATIONS SPECIFY A SMALLER FLARE.
2. THIS DETAIL WAS SOLELY CREATED TO SHOW THE GRADING REQUIRED FOR THIS TYPE OF ATTENUATOR.
3. THE GUARDRAIL END TREATMENT ATTENUATOR SHALL BE INSTALLED AS PER THE MANUFACTURER'S AND THE DEPARTMENT OF TRANSPORTATION'S SPECIFICATIONS.
4. IF CURB IS PRESENT, DEPRESS THE CURB TO A MAXIMUM HEIGHT OF 2" (50) WITHIN THE LIMITS OF THE END TREATMENT AND THROUGHOUT THE LENGTH OF THE TAPER GRADING.

GRADING FOR GUARDRAIL END TREATMENT ATTENUATOR, TYPE 1

DELAWARE DEPARTMENT OF TRANSPORTATION	GUARDRAIL APPLICATIONS		APPROVED _____ CHIEF ENGINEER 10/24/07 DATE
	STANDARD NO. B-1 (2007)	SHT. 4 OF 6	RECOMMENDED _____ DESIGN ENGINEER 10/23/07 DATE

08/01/2007

SCALE : N.T.S.

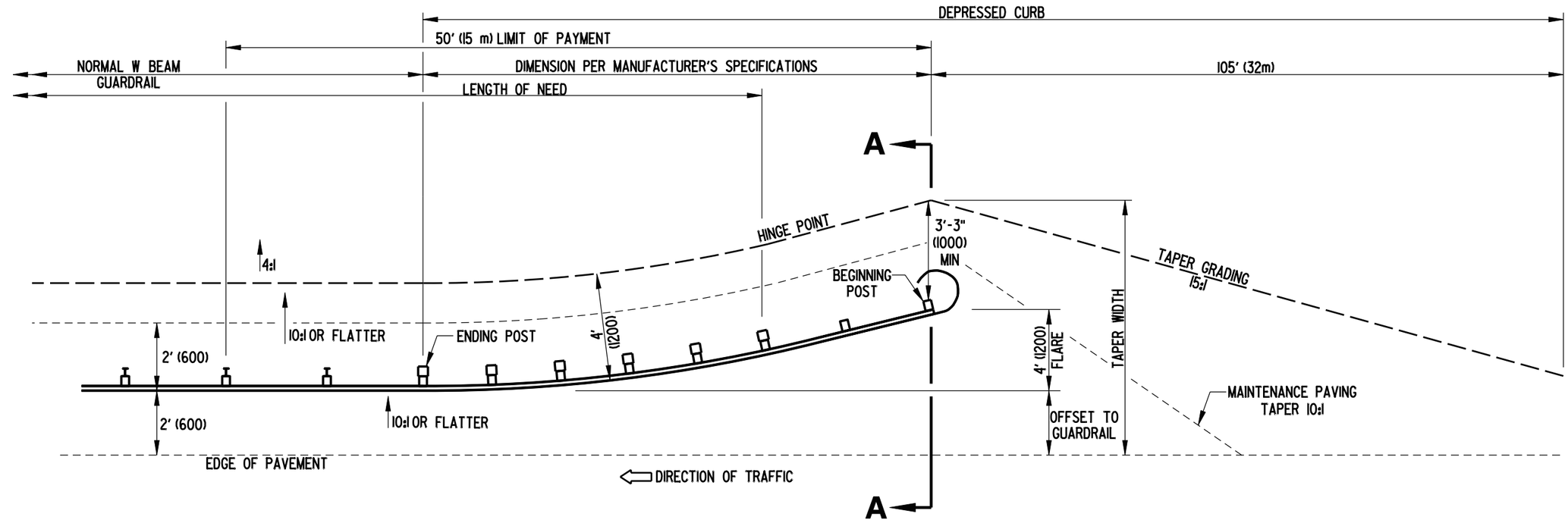

PLAN VIEW

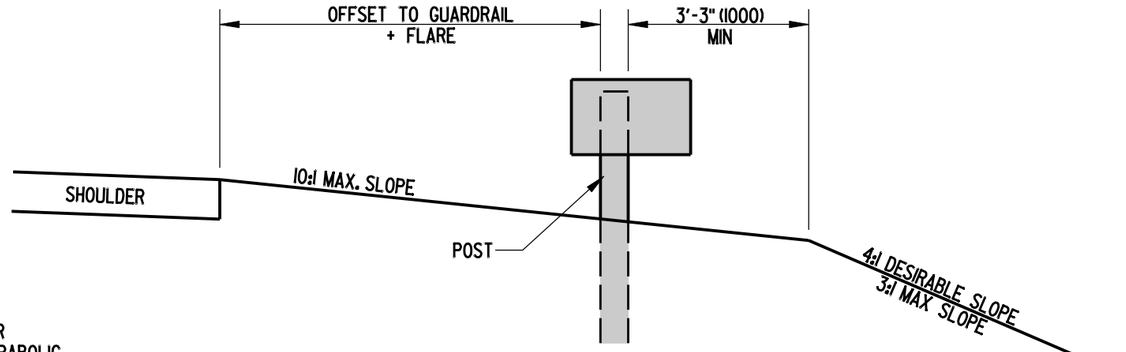

SECTION A-A

GRADING FOR GUARDRAIL END TREATMENT ATTENUATOR, TYPE 2

NOTES:

1. FLARE SHALL BE 4' (1200) UNLESS THE CONSTRUCTION PLANS OR SPECIFICATIONS SPECIFY A SMALLER FLARE. FLARE MAY BE PARABOLIC OR STRAIGHT BASED ON MANUFACTURE'S SPECIFICATIONS.
2. THIS DETAIL WAS SOLELY CREATED TO SHOW THE GRADING REQUIRED FOR THIS TYPE OF ATTENUATOR. THE GUARDRAIL END TREATMENT ATTENUATOR SHALL BE INSTALLED AS PER THE MANUFACTURER'S AND THE DEPARTMENT OF TRANSPORTATION'S SPECIFICATIONS.
3. IF CURB IS PRESENT, DEPRESS THE CURB TO A MAXIMUM HEIGHT OF 2" (50) WITHIN THE LIMITS OF THE END TREATMENT AND THROUGHOUT THE LENGTH OF THE TAPER GRADING.

DELAWARE DEPARTMENT OF TRANSPORTATION	GUARDRAIL APPLICATIONS	APPROVED _____ CHIEF ENGINEER 10/24/07 DATE
	STANDARD NO. B-1 (2007) SHT. 5 OF 6	RECOMMENDED _____ DESIGN ENGINEER 10/23/07 DATE

08/01/2007

SCALE : N.T.S.

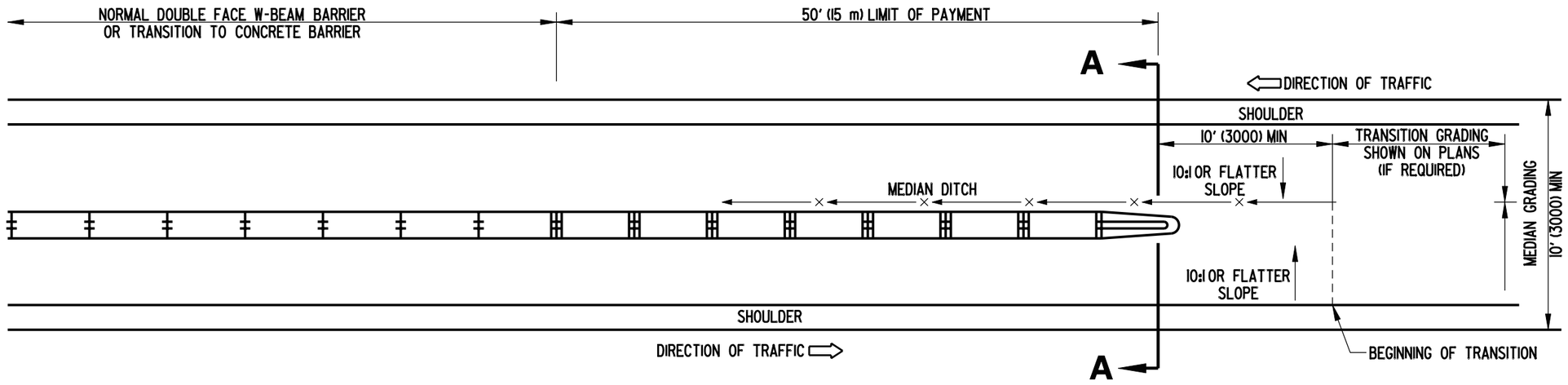

PLAN VIEW

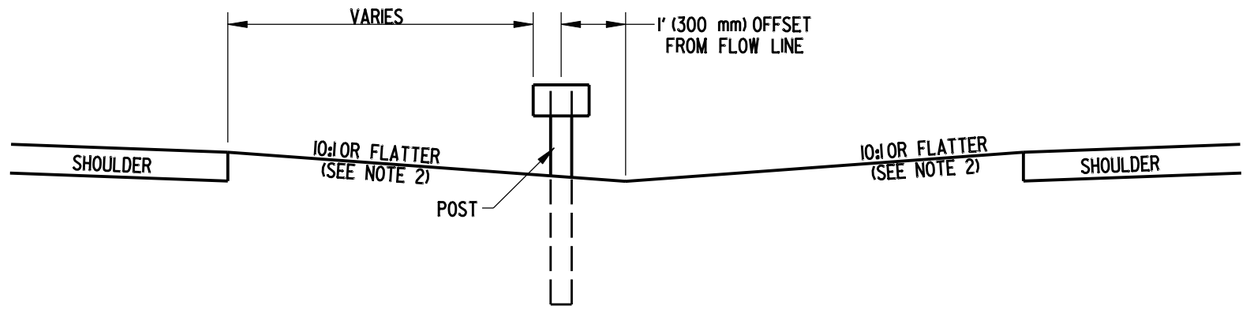

SECTION A-A

GRADING FOR END TREATMENT ATTENUATOR, TYPE 3

NOTES:

1. THIS DETAIL WAS SOLELY CREATED TO SHOW THE GRADING REQUIRED FOR THIS TYPE OF ATTENUATOR.
2. 6:1 OR FLATTER GRADING IS ALLOWABLE WHEN THE BARRIER IS LOCATED 12' (3650 mm) OR MORE FROM THE OUTSIDE EDGE OF THE SHOULDER.
3. THIS END TREATMENT CAN ALSO BE USED IN RAMP GORES OR OTHER AREAS WHERE 2 RAILS OF W-BEAM COME TOGETHER AND TERMINATE WITH ONE END TREATMENT.
4. WHEN OPPOSING ROADWAYS HAVE EQUAL ELEVATIONS THE TRAFFIC BARRIER SYSTEM SHOULD BE PLACED ON THE OPPOSITE SIDE OF THE DITCH LINE FROM APPROACHING TRAFFIC.
5. THE GUARDRAIL END TREATMENT ATTENUATOR SHALL BE INSTALLED AS PER THE MANUFACTURER'S AND THE DEPARTMENT OF TRANSPORTATION'S SPECIFICATIONS.
6. IF CURB IS PRESENT, DEPRESS THE CURB TO A MAXIMUM HEIGHT OF 2" (50) WITHIN THE LIMITS OF THE END TREATMENT AND THROUGHOUT THE LENGTH OF THE TAPER GRADING.

DELAWARE DEPARTMENT OF TRANSPORTATION	GUARDRAIL APPLICATIONS		APPROVED CHIEF ENGINEER 10/24/07 DATE
	STANDARD NO. B-1 (2007)	SHT. 6 OF 6	RECOMMENDED DESIGN ENGINEER 10/23/07 DATE

06/06/2007

SCALE : N.T.S.

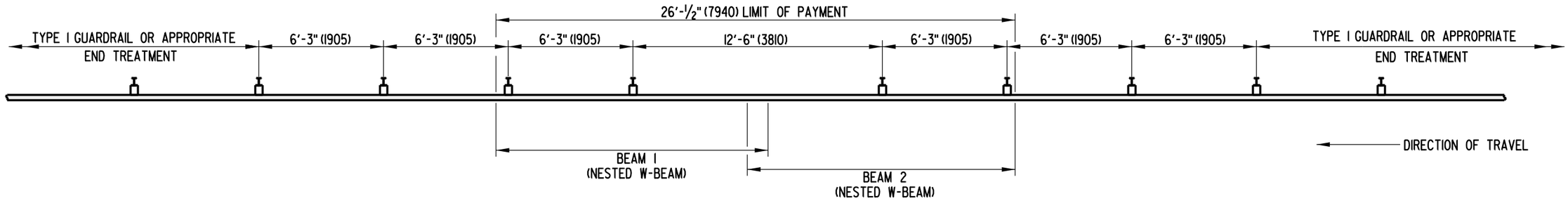

PLAN

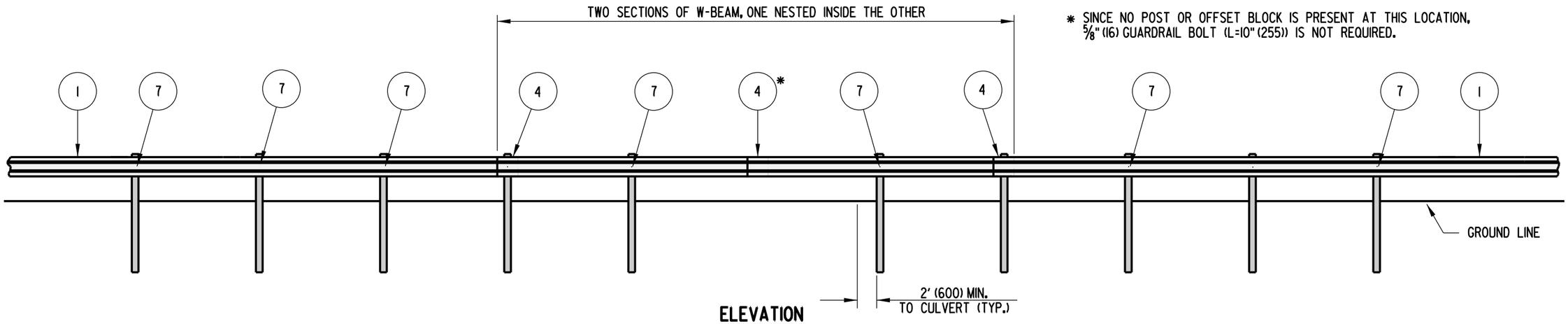

ELEVATION

* SINCE NO POST OR OFFSET BLOCK IS PRESENT AT THIS LOCATION, 5/8" (16) GUARDRAIL BOLT (L=10" (255)) IS NOT REQUIRED.

NOTES :1). ALL W-BEAMS ARE 13'-6 1/2" (4130) IN LENGTH.
2). PLACE GUARDRAIL REFLECTOR EVERY FIFTH POST.

DELAWARE DEPARTMENT OF TRANSPORTATION	GUARDRAIL OVER CULVERTS, TYPE 1	APPROVED SIGNATURE ON FILE (CHIEF ENGINEER) 01/19/2010 (DATE)
	STANDARD NO. B-2 (2009) SHT. 1 OF 3	RECOMMENDED SIGNATURE ON FILE (DESIGN ENGINEER) 01/14/2010 (DATE)

06/30/2009

SCALE : N.T.S.

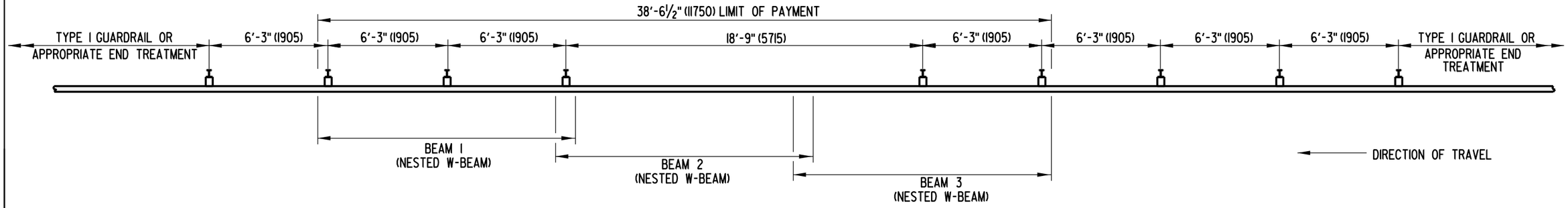

PLAN

* SINCE NO POST OR OFFSET BLOCK IS PRESENT AT THIS LOCATION, ⅝" (16) GUARDRAIL BOLT (L=10" (255)) IS NOT REQUIRED.

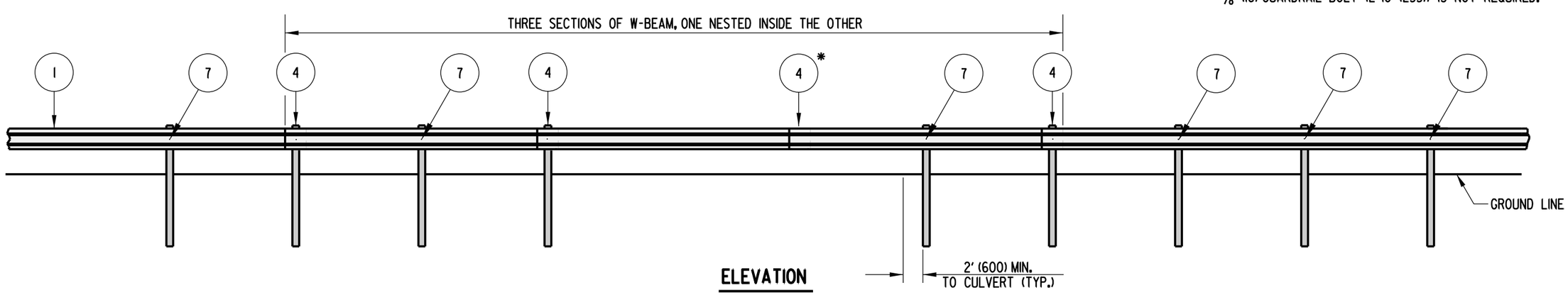

ELEVATION

NOTES : 1). ALL W-BEAMS ARE 13'-6½" (4130) IN LENGTH.
2). PLACE GUARDRAIL REFLECTOR EVERY FIFTH POST.

DELAWARE DEPARTMENT OF TRANSPORTATION	GUARDRAIL OVER CULVERTS, TYPE 2	APPROVED SIGNATURE ON FILE (CHIEF ENGINEER) 01/19/2010 (DATE)
	STANDARD NO. B-2 (2009) — SHT. 2 OF 3	RECOMMENDED SIGNATURE ON FILE (DESIGN ENGINEER) 01/14/2010 (DATE)

06/30/2009

SCALE : N.T.S.

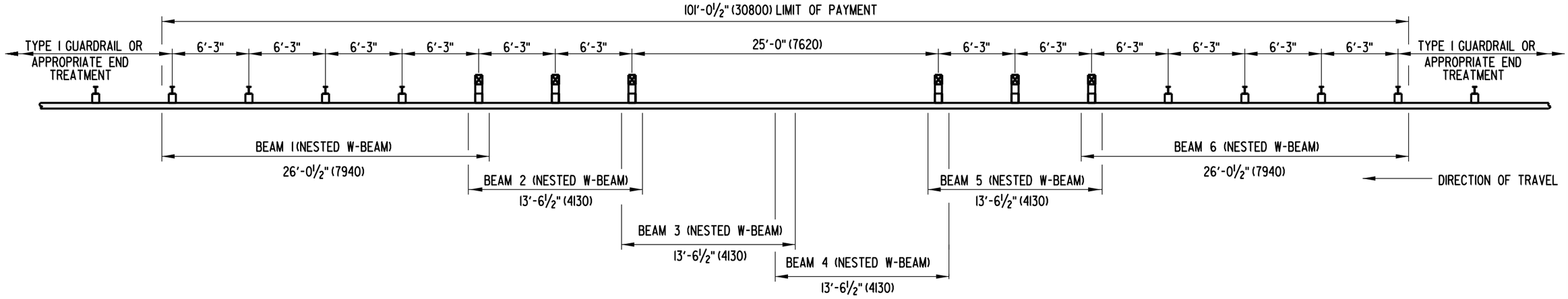

PLAN

* SINCE NO POST OR OFFSET BLOCK IS PRESENT AT THIS LOCATION, ⅝" (16) GUARDRAIL BOLT (L=10" (255)) IS NOT REQUIRED.

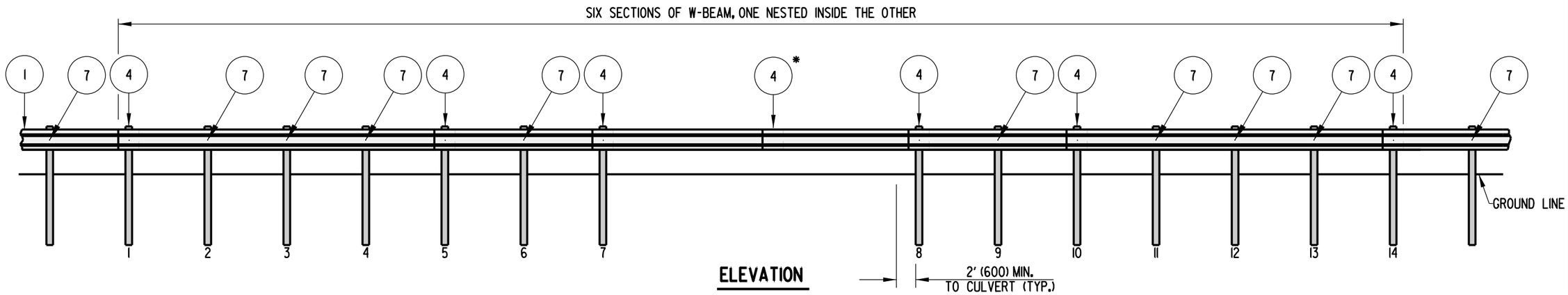

ELEVATION

NOTES:
1). PLACE GUARDRAIL REFLECTOR EVERY FIFTH POST.
2). POSTS 1-4 AND 11-14 ARE TO BE W6X9 (W15-X13.5) STEEL POSTS. POSTS 5-10 ARE TO BE 6"x8"x6' (150x200x1830) BREAKAWAY WOOD POSTS WITH 2 WOOD BLOCKS AT EACH OF THESE 6 POSTS.
3). THE SPLICES AT POSTS 5, 7, 8, & 10 ARE TO USE ⅝" (16) GUARDRAIL BOLT (L=22" (660)).

DELAWARE DEPARTMENT OF TRANSPORTATION	GUARDRAIL OVER CULVERT, TYPE 3		APPROVED SIGNATURE ON FILE (CHIEF ENGINEER) 01/19/2010 (DATE)
	STANDARD NO. B-2 (2009)	SHT. 3 OF 3	RECOMMENDED SIGNATURE ON FILE (DESIGN ENGINEER) 01/14/2010 (DATE)

12/1/2009

SCALE : N.T.S.

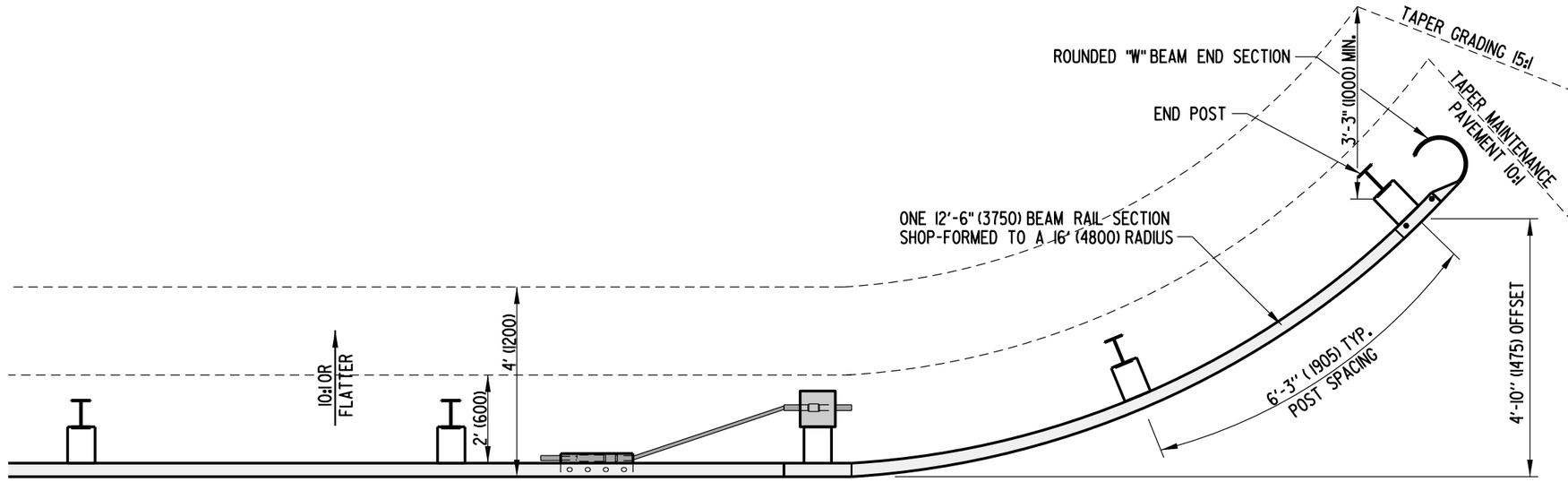

PLAN

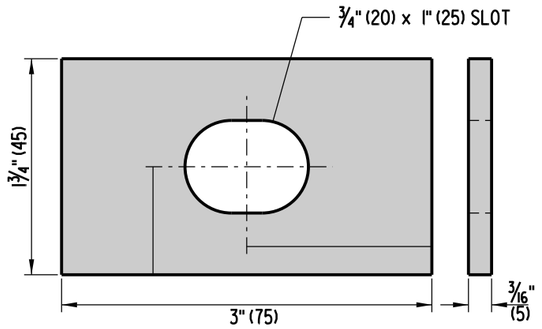

PLATE WASHER DETAIL

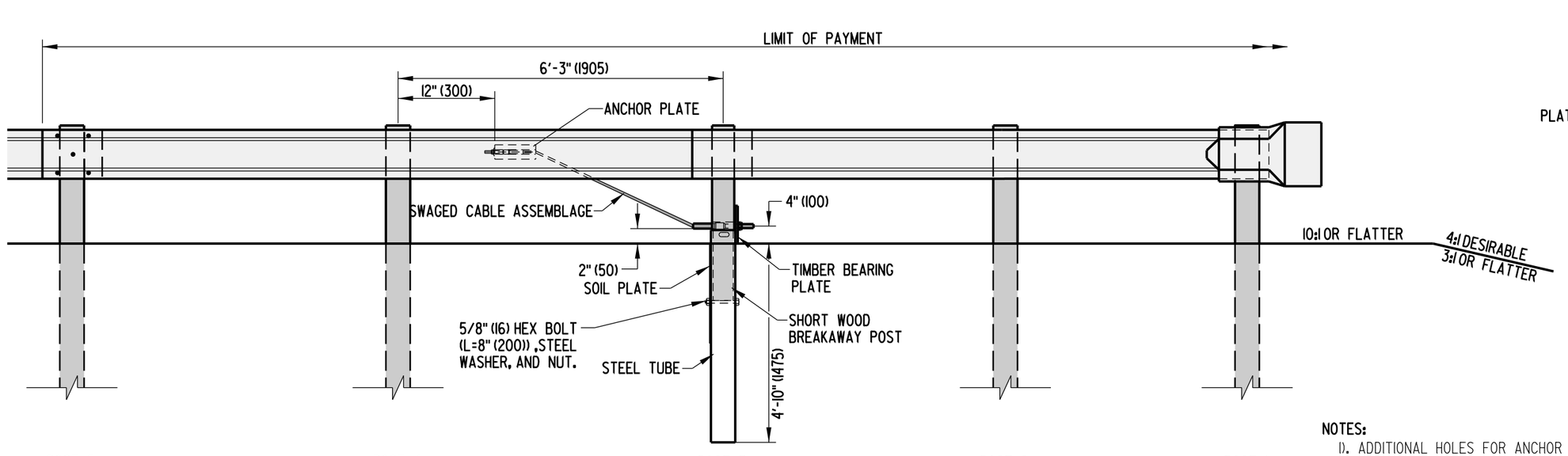

ELEVATION

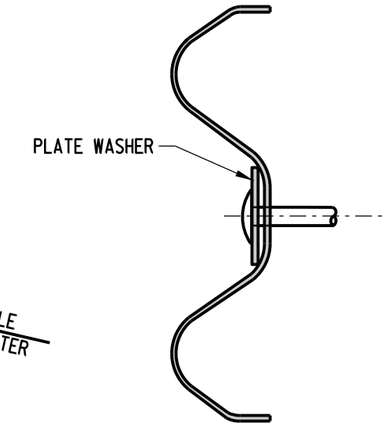

PLATE WASHER MOUNTING POSITION

NOTES:

1). ADDITIONAL HOLES FOR ANCHOR PLATE SHALL BE DRILLED PRIOR TO GALVANIZING. (SEE STANDARD HARDWARE SHEET FOR HOLE SPACING INFORMATION).
2). CONTRACTOR HAS THE OPTION OF USING A 6' (1830) STEEL TUBE WITHOUT A SOIL PLATE OR A 5' (1525) STEEL TUBE WITH A SOIL PLATE.
3). PLATE WASHERS WILL BE INSTALLED AT POSTS 3 & 4 ONLY.
4). THIS END TREATMENT SHALL ONLY BE USED ON TRAVEL WAYS WITH A POSTED SPEED LIMIT OF 40 MPH (64 KM/H) OR LESS.

DELAWARE DEPARTMENT OF TRANSPORTATION	GUARDRAIL END TREATMENT, TYPE 4	APPROVED SIGNATURE ON FILE (CHIEF ENGINEER) 01/19/2010 (DATE)
	STANDARD NO. B-3 (2009) — SHT. 1 OF 1	RECOMMENDED SIGNATURE ON FILE (DESIGN ENGINEER) 01/14/2010 (DATE)

12/01/2009

SCALE : N.T.S.

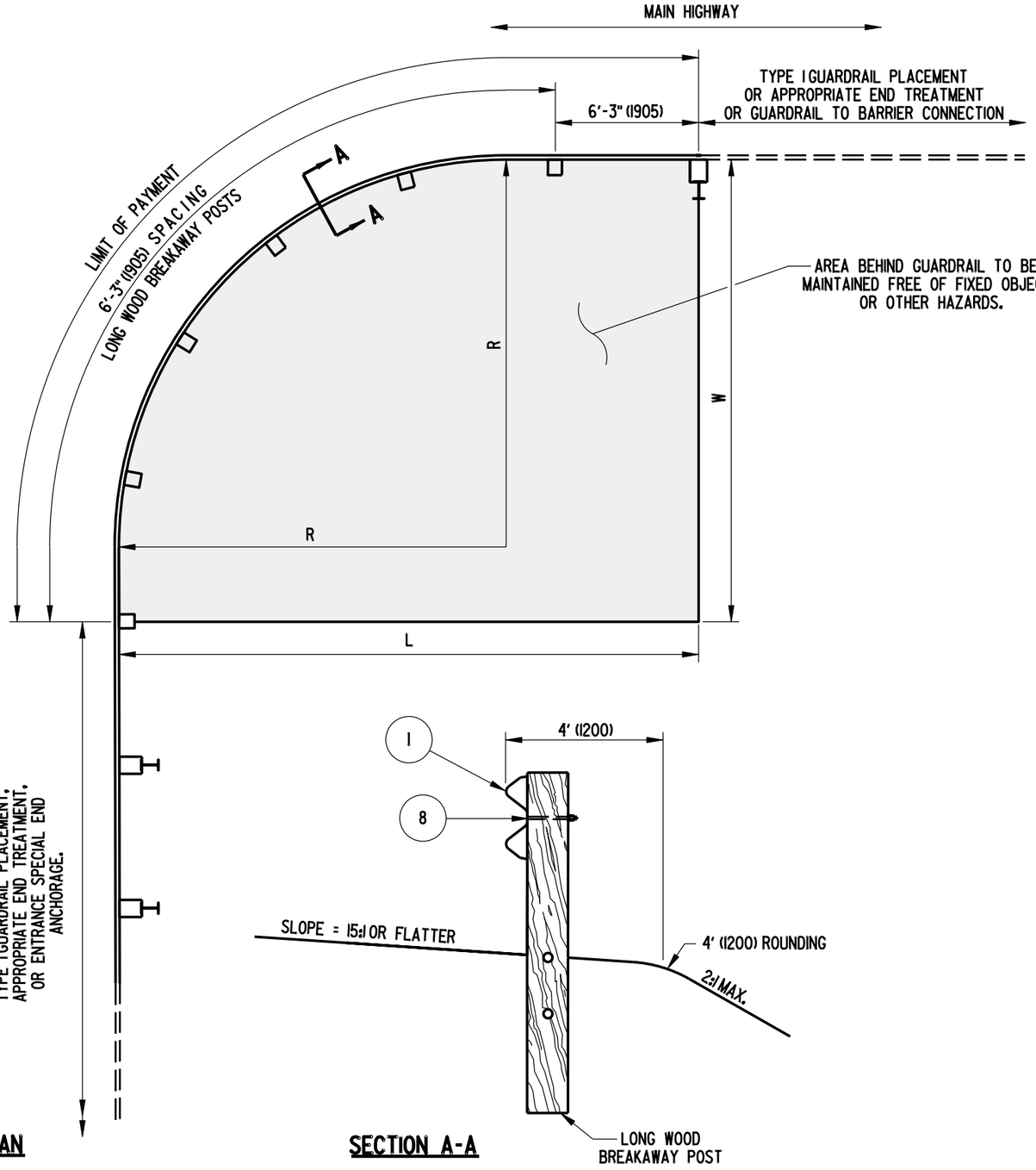

PLAN

SECTION A-A

RADIUS	MIN. REQUIRED AREA FREE OF FIXED OBJECTS
	L x W
8'-6" (2600)	25' x 15' (7600 x 4500)
17'-0" (5200)	30' x 15' (9144 x 4500)
25'-6" (7800)	40' x 20' (1200 x 6000)
35'-0" (10700)	50' x 20' (15200 x 6000)

NOTES:

1). NO WASHERS ARE USED ON THE RAIL SIDE OF THE LONG WOOD BREAKAWAY POSTS.
2). THE CURVED GUARDRAIL SECTION SHALL BE SHOP BENT.
3). PLACE GUARDRAIL REFLECTOR EVERY FIFTH POST.
4). IF CURB IS USED IN CONJUNCTION WITH CURVED GUARDRAIL SECTION, THE CURB CANNOT BE HIGHER THAN 2" (50).
5). ON THE 8'6' (2600) RADIUS SYSTEM ONLY, THE RAIL IS NOT TO BE BOLTED TO THE CENTER POST.

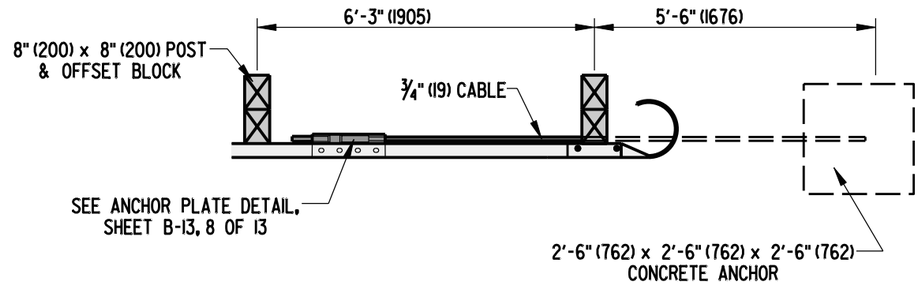

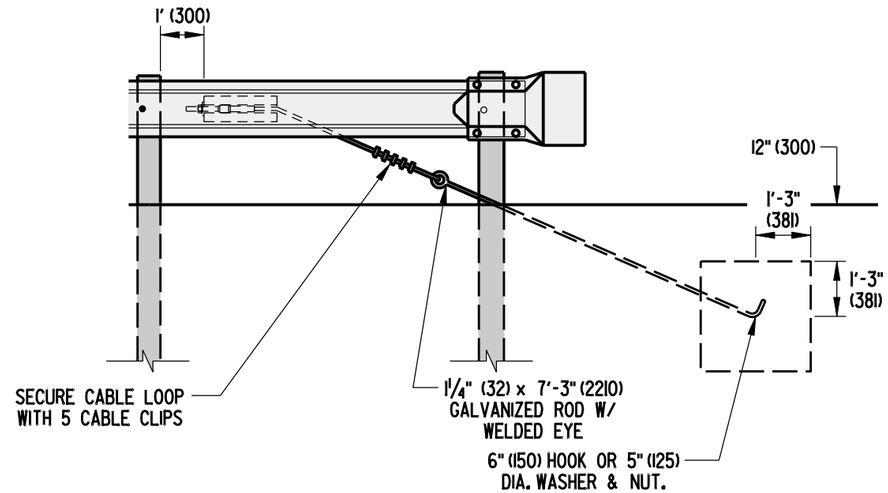

ENTRANCE SPECIAL END ANCHORAGE

DELAWARE DEPARTMENT OF TRANSPORTATION	CURVED GUARDRAIL SECTION		APPROVED CHIEF ENGINEER	10/24/07 DATE
	STANDARD NO. B-4 (2007)	SHT. 1 OF 1	RECOMMENDED DESIGN ENGINEER	10/23/07 DATE

08/14/2006

SCALE : N.T.S.

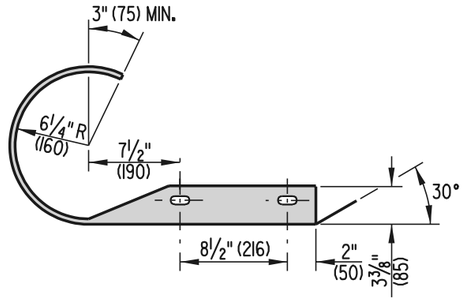

END SECTION PLAN

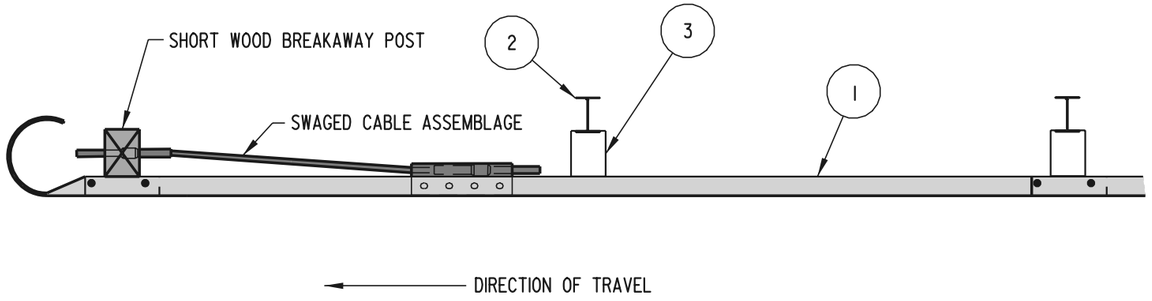

PLAN

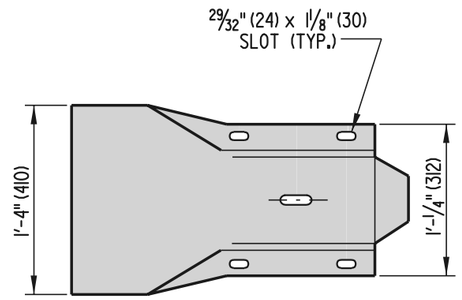

END SECTION ELEVATION

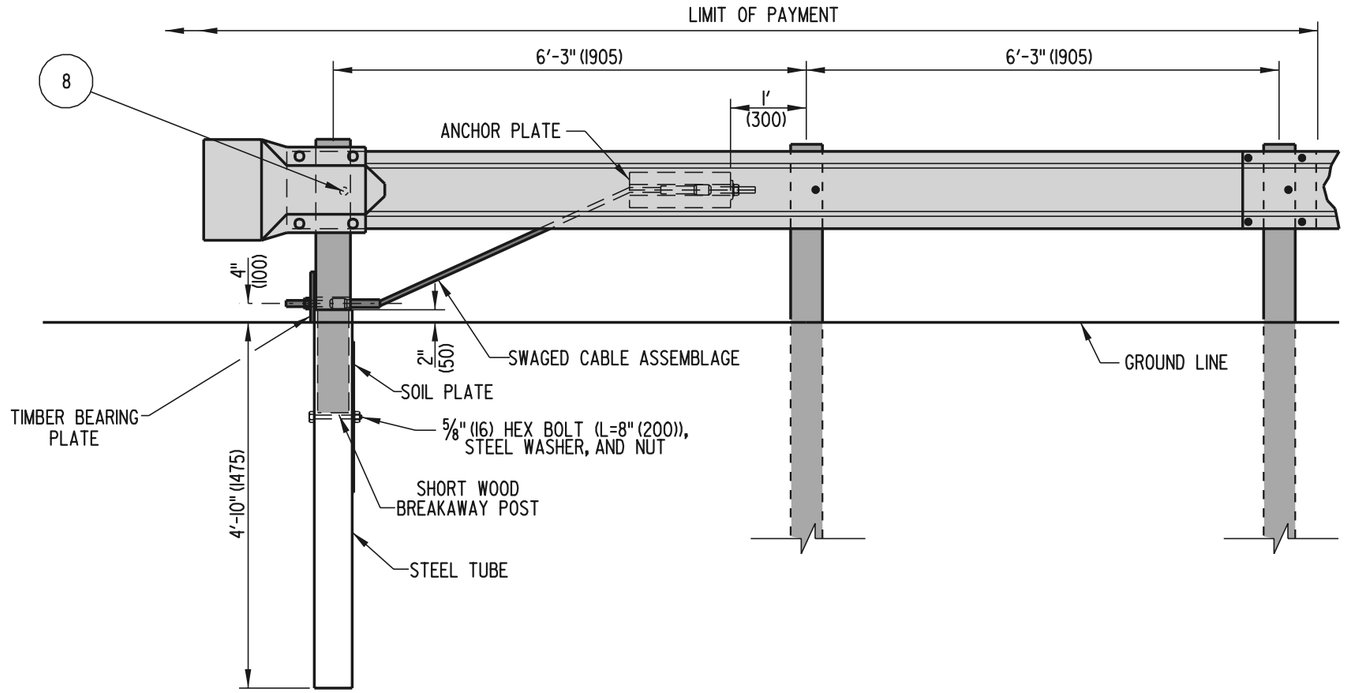

ELEVATION

NOTES:

1. ADDITIONAL HOLES FOR ANCHOR PLATE SHALL BE DRILLED PRIOR TO GALVANIZING. (SEE STANDARD HARDWARE SHEET FOR HOLE SPACING INFORMATION).
2. CONTRACTOR HAS THE OPTION OF USING A 6' (1830) STEEL TUBE WITHOUT A SOIL PLATE OR A 5' (1525) STEEL TUBE WITH A SOIL PLATE.

DELAWARE DEPARTMENT OF TRANSPORTATION	END ANCHORAGE		APPROVED Carolann Wicks CHIEF ENGINEER 9/6/02 DATE
	STANDARD NO. B-5 (2002)	SHT. 1 OF 1	RECOMMENDED DESIGN ENGINEER 8/19/02 DATE

07/31/2002

SCALE : N.T.S.

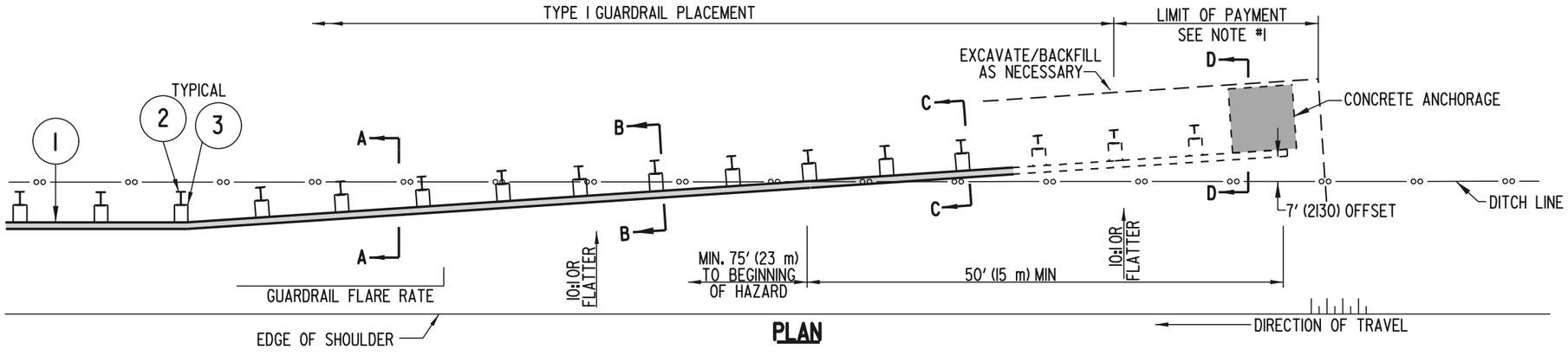

PLAN

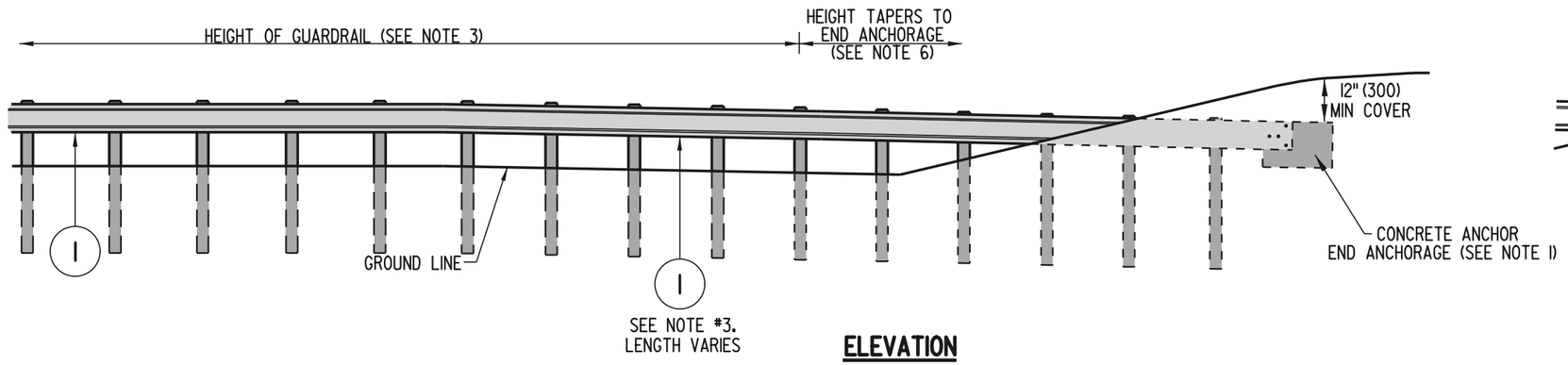

ELEVATION

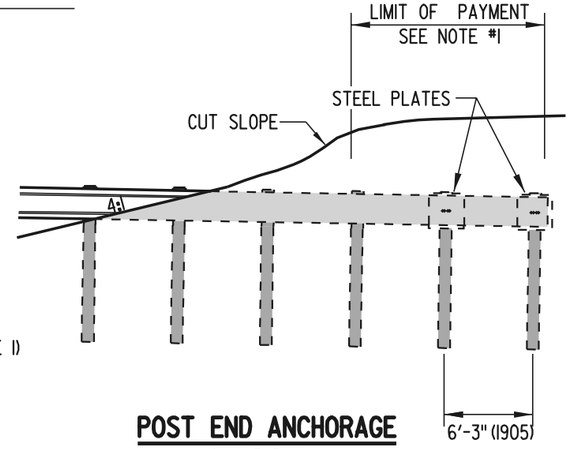

POST END ANCHORAGE
(SINGLE RAIL)

FLARE RATES	
DESIGN SPEED	FLARE RATE
70 MPH (110 km/h)	15:1
60 MPH (100 km/h)	14:1
55 MPH (90 km/h)	12:1
50 MPH (80 km/h)	11:1
45 MPH (70 km/h)	10:1
40 MPH (60 km/h)	9:1
30 MPH (50 km/h)	7:1

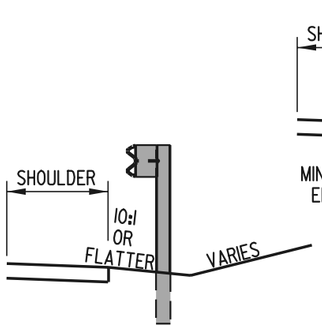

SECTION A-A

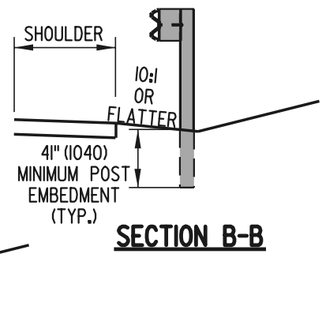

SECTION B-B

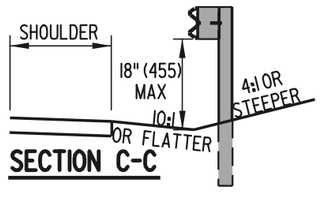

SECTION C-C

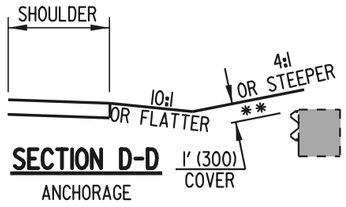

SECTION D-D
ANCHORAGE

** 1' (300) BURIAL IS NOT REQUIRED WHEN ANCHORING IN ROCK.

NOTES:

1). BURIED END SECTION PAYMENT INCLUDES THE CONCRETE OR POST ANCHORAGE, EXCAVATION, BACKFILL, AND ALL APPLICABLE ITEMS INCLUDING LABOR NECESSARY TO COMPLETE END ANCHORAGE.
2). THE CONTRACTOR HAS THE OPTION OF USING EITHER A CONCRETE BLOCK ANCHOR OR A POST ANCHOR TO TERMINATE THE BURIED END SECTION.
3). WHEN PLACING GUARDRAIL ON A 10:1 OR FLATTER SLOPE, THE HEIGHT OF THE GUARDRAIL SHALL BE HELD CONSTANT RELATIVE TO THE GROUND DIRECTLY UNDER THE FACE OF THE GUARDRAIL.
4). ALL POSTS SHALL BE 6' (1800) FOR SINGLE RAIL INSTALLATION.
5). WHEN USING THE BURIED END SECTION, THE DESIGN MUST PROVIDE A MINIMUM OF 75' (23 m) FROM WHERE THE GUARDRAIL CROSSES THE DITCH LINE TO THE BEGINNING OF THE HAZARD.
6). MAINTAIN THE FLARE OF THE GUARDRAIL UNTIL THE 12" (300) COVER HAS BEEN ATTAINED. IF THE 12" (300) COVER CANNOT BE ATTAINED BEFORE THE RAIL IS 7' (2100) BEHIND THE BOTTOM OF THE DITCH, THEN SLOPE THE GUARDRAIL FROM THE POINT WHERE IT CROSSES THE DITCH TO WHERE IT IS 7' (2100) BEHIND THE DITCH, SO THAT IT HAS 12" (300) OF COVER.

DELAWARE
DEPARTMENT OF TRANSPORTATION

BURIED END SECTION

STANDARD NO. B-6 (2002) | SHT. 1 OF 3

APPROVED Carlton Wicks (CHIEF ENGINEER) 9/6/02 (DATE)

RECOMMENDED (DESIGN ENGINEER) 8/19/02 (DATE)

07/31/2002

SCALE : N.T.S.

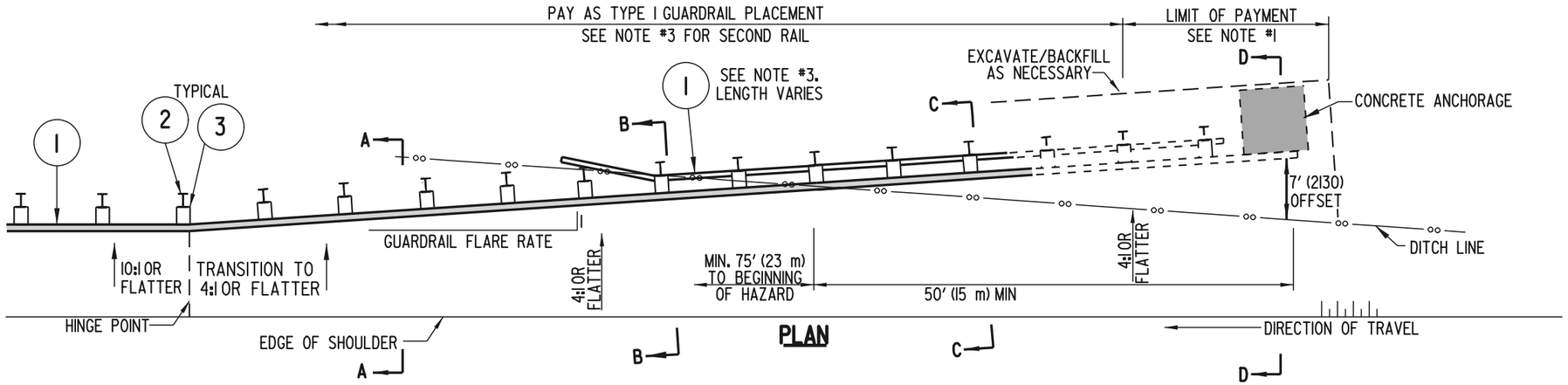

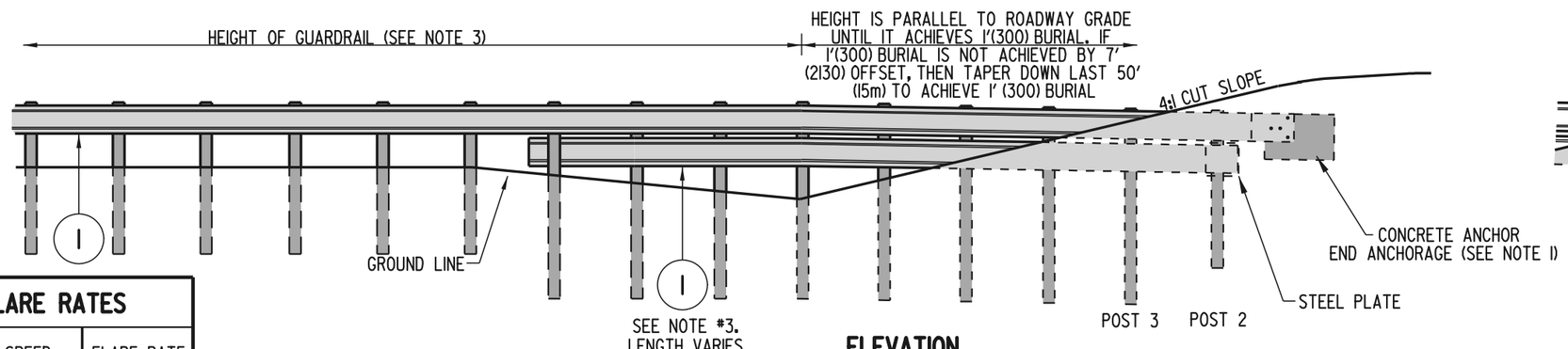

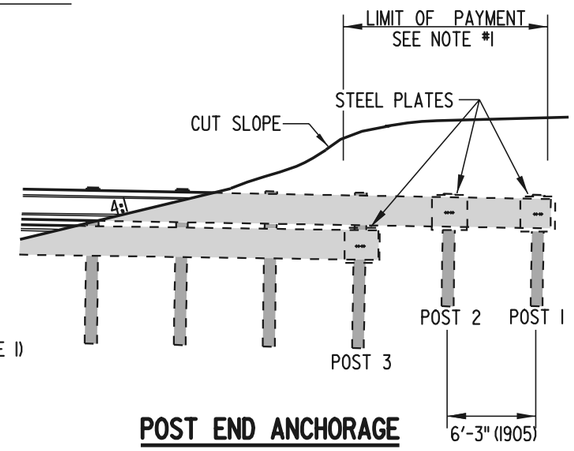

POST END ANCHORAGE

FLARE RATES

DESIGN SPEED	FLARE RATE
70 MPH (110 km/h)	15:1
60 MPH (100 km/h)	14:1
55 MPH (90 km/h)	12:1
50 MPH (80 km/h)	11:1
45 MPH (70 km/h)	10:1
40 MPH (60 km/h)	9:1
30 MPH (50 km/h)	7:1

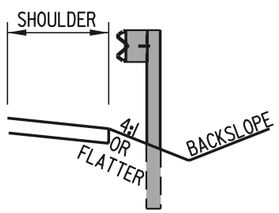

SECTION A-A

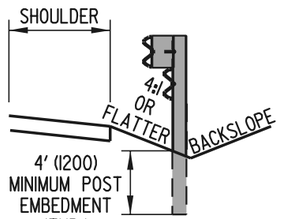

SECTION B-B
(WITH RUBRAIL)

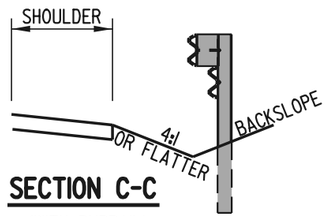

SECTION C-C
(WITH RUBRAIL)

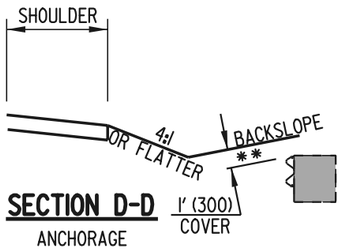

SECTION D-D
ANCHORAGE

** 1' (300) BURIAL IS NOT REQUIRED WHEN ANCHORING IN ROCK.

NOTES:

1). BURIED END SECTION PAYMENT INCLUDES THE CONCRETE OR POST ANCHORAGE, EXCAVATION, BACKFILL, AND ALL APPLICABLE ITEMS, INCLUDING LABOR NECESSARY TO COMPLETE END ANCHORAGE.

2). THE CONTRACTOR HAS THE OPTION OF USING EITHER A CONCRETE BLOCK ANCHOR OR A POST ANCHOR TO TERMINATE THE BURIED END SECTION.

3). THE TOP OF THE W-BEAM SHALL BE HELD CONSTANT RELATIVE TO THE ROADWAY PROFILE GRADE UNTIL IT CROSSES THE DITCH FLOW LINE. A SECOND W-BEAM RAIL IS REQUIRED WHEN THE DISTANCE BETWEEN THE GROUND AND THE BOTTOM OF THE TOP RAIL EXCEEDS 18" (450). THE MAXIMUM HEIGHT OF THE DOUBLE RAIL SYSTEM IS 45" (1150). IF NECESSARY, TAPER BOTH RAILS DOWN TO MAINTAIN MAXIMUM HEIGHT. SECOND RAIL SHALL BE PAID FOR AS ADDITIONAL LINEAR FEET (LINEAR METERS) OF TYPE I GUARDRAIL

4). WHEN USING A SECOND RAIL, 8' (2400) LONG POSTS ARE REQUIRED. BEHIND THE DITCHLINE, POSTS MUST PROVIDE 4' (1200) MINIMUM EMBEDMENT (20" (510) WHEN ROCK IS ENCOUNTERED). POSTS FOR THE POST ANCHOR SHALL BE 6' (1800) LONG.

5). WHEN USING THE BURIED END SECTION, THE DESIGN MUST PROVIDE A MINIMUM OF 75' (23 m) FROM WHERE THE GUARDRAIL CROSSES THE DITCH LINE TO THE BEGINNING OF THE HAZARD.

6). MAINTAIN THE FLARE OF THE GUARDRAIL UNTIL THE 12" (300) COVER HAS BEEN ATTAINED. IF THE 12" (300) COVER CANNOT BE ATTAINED BEFORE THE RAIL IS 7' (2100) BEHIND THE BOTTOM OF THE DITCH, THEN SLOPE THE GUARDRAIL FROM THE POINT WHERE IT CROSSES THE DITCH TO WHERE IT IS 7' (2100) BEHIND THE DITCH, SO THAT IT HAS 12" (300) OF COVER.

DELAWARE
DEPARTMENT OF TRANSPORTATION

BURIED END SECTION

STANDARD NO. B-6 (2002) | SHT. 2 OF 3

APPROVED Carolann Wicks CHIEF ENGINEER 9/6/02 DATE

RECOMMENDED Mark A. DeFalco DESIGN ENGINEER 8/19/02 DATE

07/31/2002

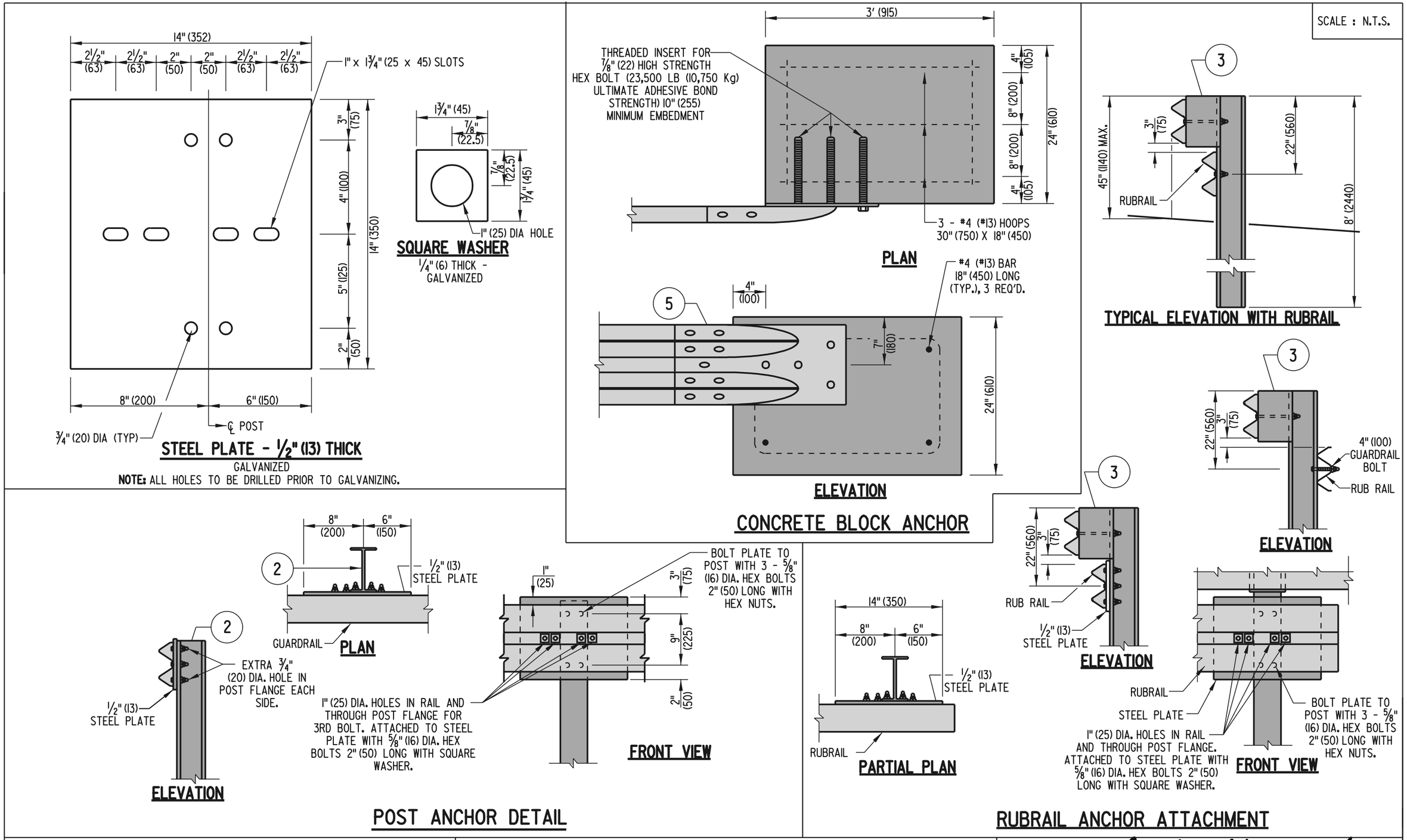

DELAWARE DEPARTMENT OF TRANSPORTATION	BURIED END SECTION		APPROVED Carolan Wicks CHIEF ENGINEER 9/6/02 DATE
	STANDARD NO. B-6 (2002)	SHT. 3 OF 3	RECOMMENDED [signature] DESIGN ENGINEER 8/19/02 DATE

07/31/2002

SCALE : N.T.S.

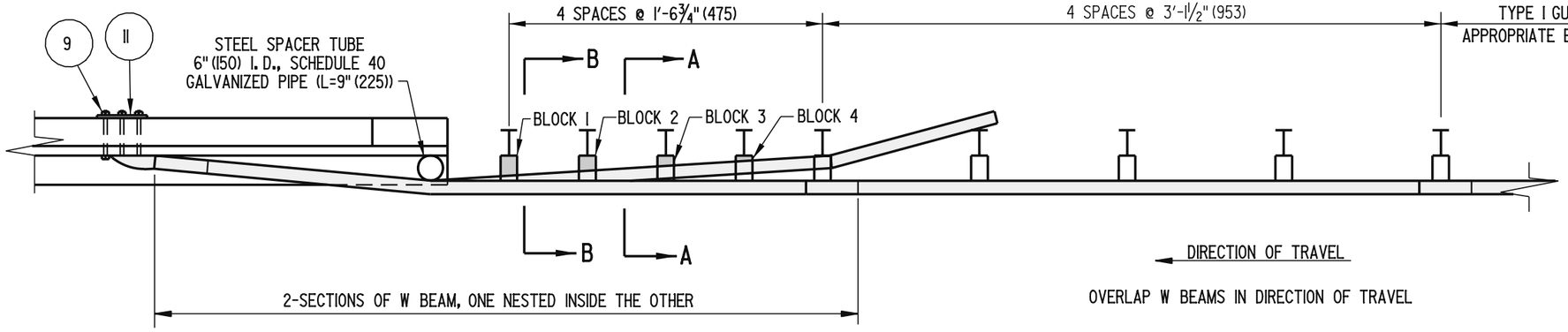

PLAN

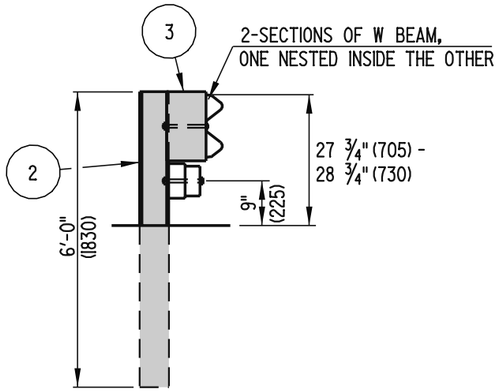

POSTS NO. 3, 4, & 5 SECTION A-A

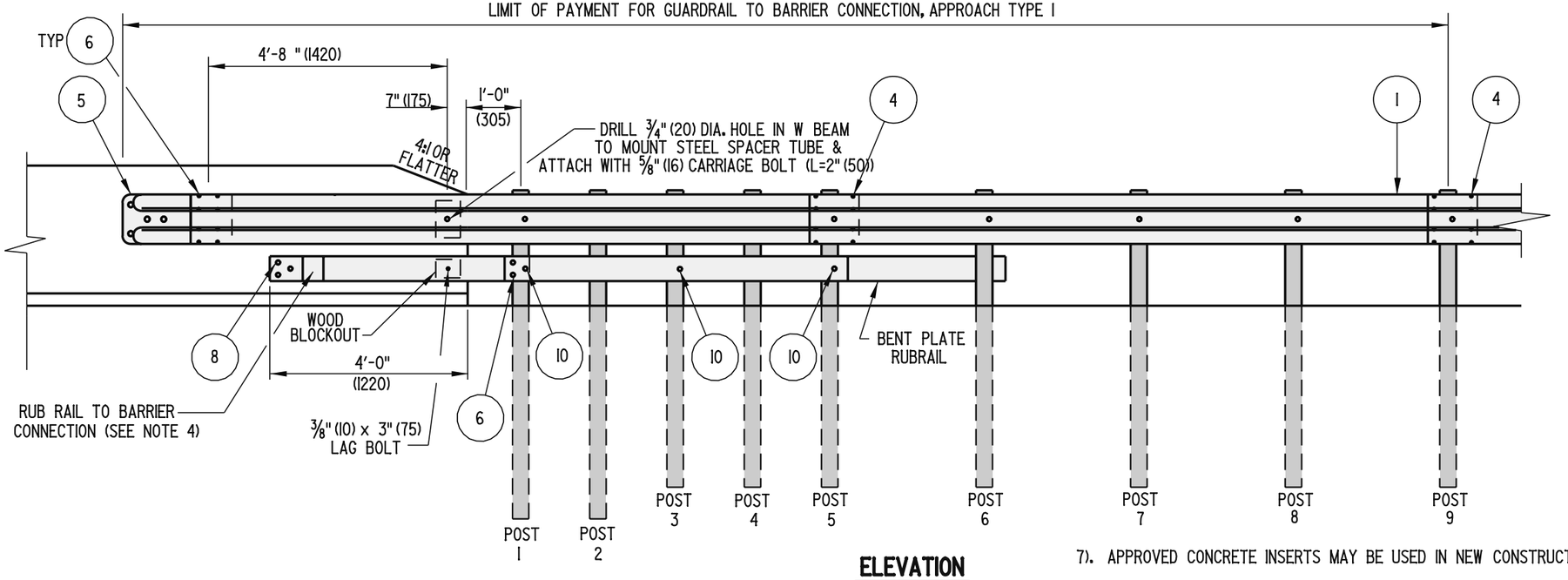

ELEVATION

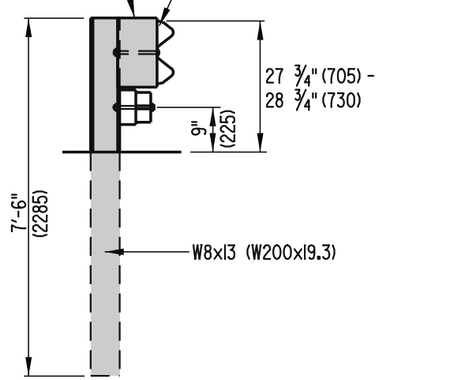

POSTS NO. 1&2 SECTION B-B

NOTES:
1). W BEAM IS NOT BOLTED TO POSTS AT POSTS 2 THROUGH 4.
2). RUB RAIL IS NOT BOLTED AT POSTS 2 AND 4.
3). POSTS 1 THROUGH 6 REQUIRE AN ADDITIONAL HOLE TO ATTACH LOWER WOOD BLOCKS AND/OR RUBRAIL AND WOOD BLOCK.
4). USE APPROPRIATE EPOXY BOLT ANCHORS TO REDUCE THE CHANCE OF SPLITTING THE CONCRETE. PLACE STEEL WASHERS (FOR 5/8" (16) BOLT) BETWEEN BOLT HEADS AND RUB RAIL.
5). ALL HOLES SHALL BE DRILLED PRIOR TO GALVANIZING.
6). PLACE GUARDRAIL REFLECTOR EVERY FIFTH POST.
7). APPROVED CONCRETE INSERTS MAY BE USED IN NEW CONSTRUCTION TO ATTACH TERMINAL CONNECTOR TO PARAPET.
8). POSTS 1& 2 ARE W8x13 (W200x19.3). ALL OTHER POSTS IN TRANSITION ARE W6x9 (W150x13.5).

7). APPROVED CONCRETE INSERTS MAY BE USED IN NEW CONSTRUCTION

DELAWARE
DEPARTMENT OF TRANSPORTATION

GUARDRAIL TO BARRIER CONNECTION, APPROACH TYPE 1

STANDARD NO. B-7 (2004) | SHT. 1 OF 3

APPROVED Carolann Wicks CHIEF ENGINEER 12/5/05 DATE

RECOMMENDED James M. O'Neill DESIGN ENGINEER 11/29/05 DATE

08/08/2005

SCALE : N.T.S.

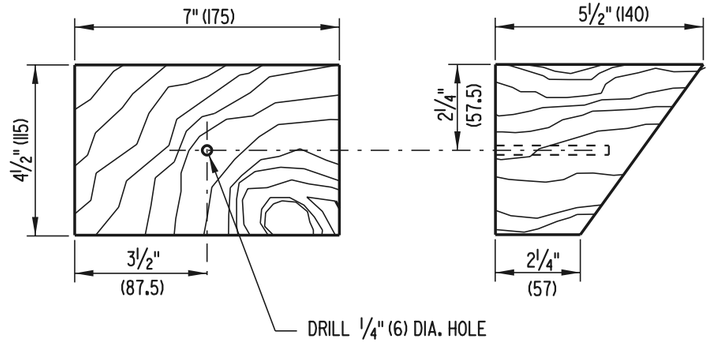

ELEVATION

RIGHT SIDE

WOOD BLOCKOUT DETAIL

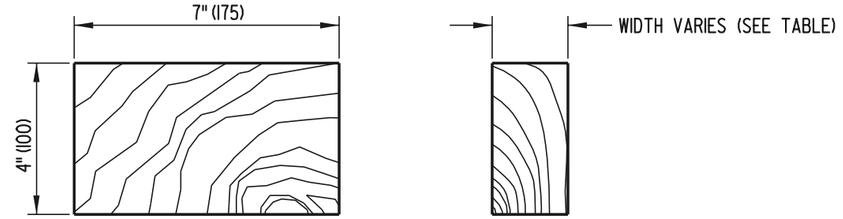

ELEVATION

RIGHT SIDE

RUB RAIL WOOD BLOCKS

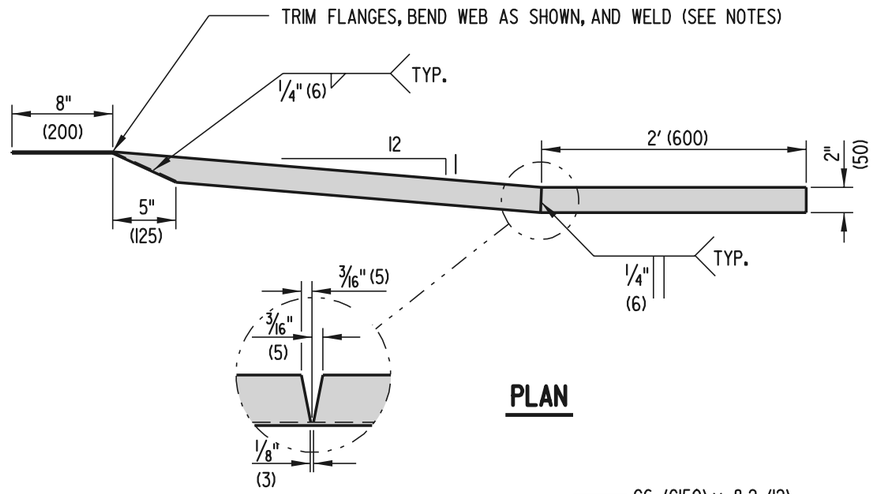

PLAN

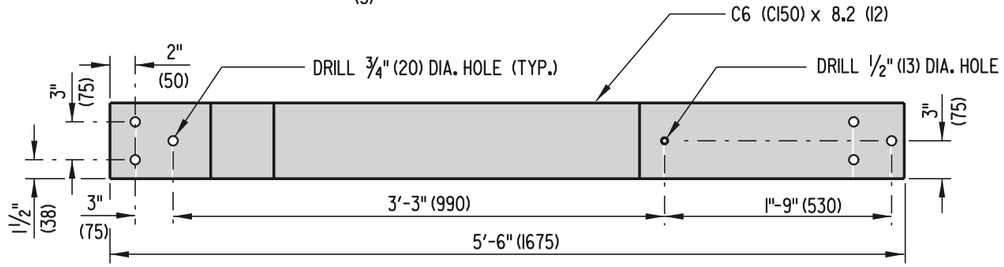

ELEVATION

RUB RAIL TO BARRIER CONNECTION

RUB RAIL WOOD BLOCKS (7" (175) x 4" (100))		
POST NO.	WIDTH	BOLT LENGTH
1	4 1/4" (108)	6" (150)
2	3 1/4" (83)	4" (100)
3	2" (50)	4" (100)
4	1" (25)	2" (50)

NOTES:

1). THE RUB RAIL TO BARRIER CONNECTION END MUST BE ATTACHED FLUSH WITH THE SLOPED TOE OF THE SAFETY BARRIER. INSTALLATION CAN BE SIMPLIFIED BY FABRICATING OR SHOP TWISTING THE RUB RAIL END TO BE CONSISTENT WITH THE SLOPE OF THE BARRIER, HOWEVER, FIELD BENDING USING HEAT IS PERMITTED.

2). STEEL SPACER TUBE IS SCHEDULE 40 GALVANIZED PIPE, 6" (152) (I.D.) x 9" (229)

DELAWARE DEPARTMENT OF TRANSPORTATION	GUARDRAIL TO BARRIER CONNECTION, APPROACH TYPE 1		APPROVED [signature] CHIEF ENGINEER 6/18/01 DATE
	STANDARD NO. B-7 (2001)	SHT. 2 OF 3	RECOMMENDED [signature] DESIGN ENGINEER 6/15/01 DATE

04/05/2001

SCALE : N.T.S.

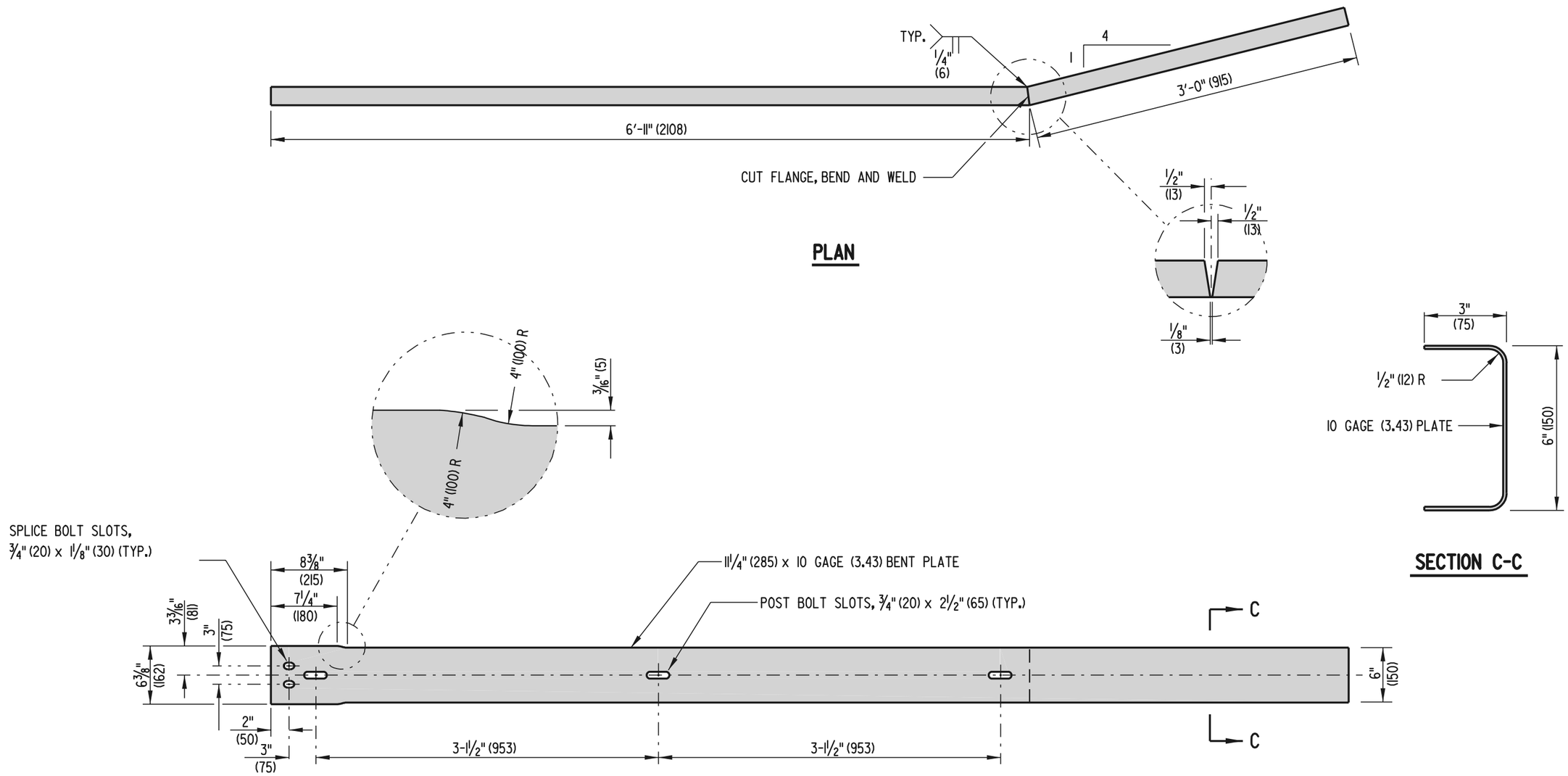

PLAN

ELEVATION

SECTION C-C

BENT PLATE RUB RAIL

DELAWARE DEPARTMENT OF TRANSPORTATION	GUARDRAIL TO BARRIER CONNECTION, APPROACH TYPE 1		APPROVED [signature] CHIEF ENGINEER 6/18/01 DATE
	STANDARD NO. B-7 (2001)	SHT. 3 OF 3	RECOMMENDED [signature] DESIGN ENGINEER 6/15/01 DATE

04/05/2001

SCALE : N.T.S.

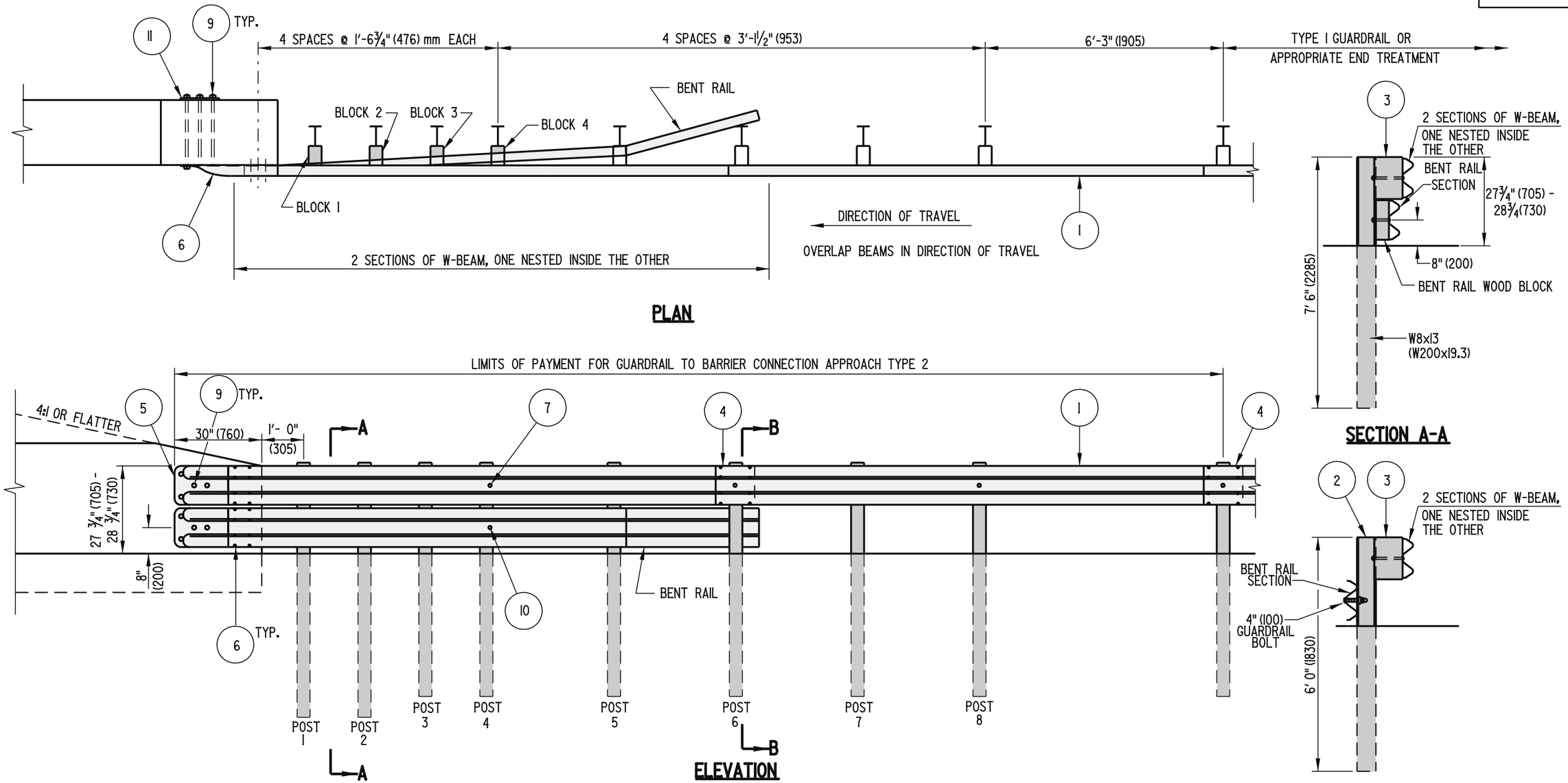

NOTES :

1). CURB SHALL NOT BE USED AT THE FACE OF RAIL WITHIN THE LIMITS OF THIS INSTALLATION.
2). POSTS 1, 2, 3, 4, AND 6 REQUIRE AN ADDITIONAL HOLE TO ATTACH WOOD BLOCKS AND/OR BENT RAIL.
3). DO NOT ATTACH RAILS TO POSTS 1, 2, 3, 5, OR 7.
4). POSTS 1 AND 2 ARE W8x13 (W200x19.3). ALL OTHER POSTS IN TRANSITION ARE W6x9 (w150x13.5).
5). ALL HOLES SHALL BE DRILLED PRIOR TO GALVANIZING.
6). BENT RAIL MAY BE SHOP BENT TO FACILITATE INSTALLATION OR MAY BE FIELD BENT USING HEAT.
7). APPROVED CONCRETE INSERTS MAY BE USED IN NEW CONSTRUCTION TO ATTACH TERMINAL CONNECTORS TO PARAPET.
8). PLACE GUARDRAIL REFLECTOR EVERY FIFTH POST.
9). FOR INSTALLATIONS WHERE CURB EXISTS, IF THE EXISTING CURB IS 8" (200) OR HIGHER AND CANNOT BE REMOVED, THE BOTTOM RAIL CAN BE ELIMINATED.

DELAWARE DEPARTMENT OF TRANSPORTATION	GUARDRAIL TO BARRER CONNECTION, APPROACH TYPE 2		APPROVED Carolann Wicks CHIEF ENGINEER 12/5/05 DATE
	STANDARD NO. B-8 (2005)	SHT. 1 OF 2	RECOMMENDED [signature] DESIGN ENGINEER 11/29/05 DATE

10/17/2005

SCALE : N.T.S.

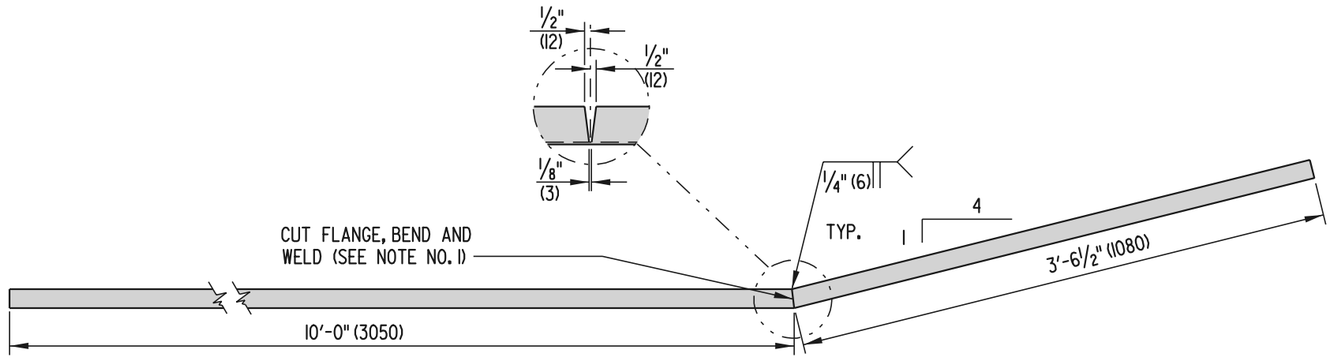

BENT RAIL

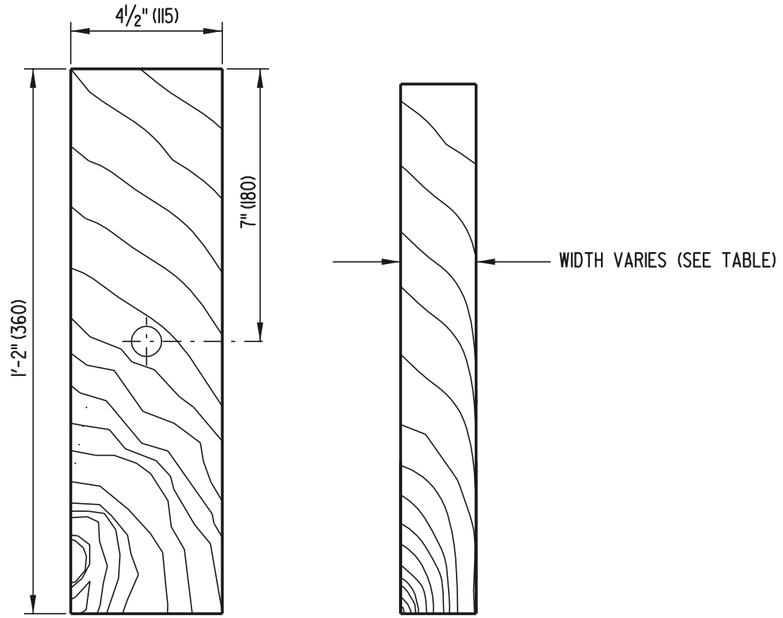

ELEVATION RIGHT SIDE

BENT RAIL WOOD BLOCKS

BENT RAIL WOOD BLOCKS 1'-2" (360) x 4 1/2" (115)		
BLOCK	WIDTH	BOLT LENGTH
1	5" (125)	8" (200)
2	4" (100)	6" (150)
3	3" (75)	6" (150)
4	2" (50)	4" (100)

NOTE: BOTTOM WOOD BLOCKS LOCATED ON POSTS 1-4 ARE OFFSET DRILLED TO SIT SQUARELY ON THE POST FLANGE AND SECURED WITH 5/8" (16) CARRIAGE BOLTS (L VARIES), SEE BENT RAIL WOOD BLOCKS TABLE.

DELAWARE
DEPARTMENT OF TRANSPORTATION

GUARDRAIL TO BARRIER CONNECTION, APPROACH TYPE 2

STANDARD NO. B-8 (2001) SHT. 2 OF 2

APPROVED _____ CHIEF ENGINEER DATE 6/18/01

RECOMMENDED _____ DESIGN ENGINEER DATE 6/15/01

04/05/2001

SCALE : N.T.S.

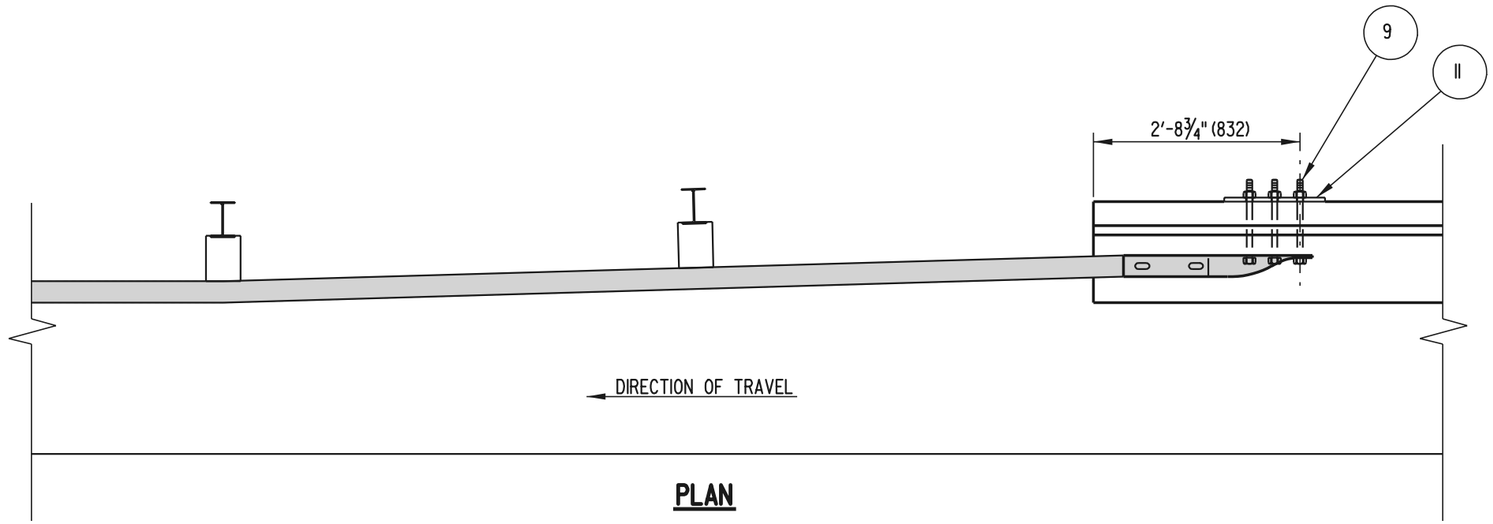

PLAN

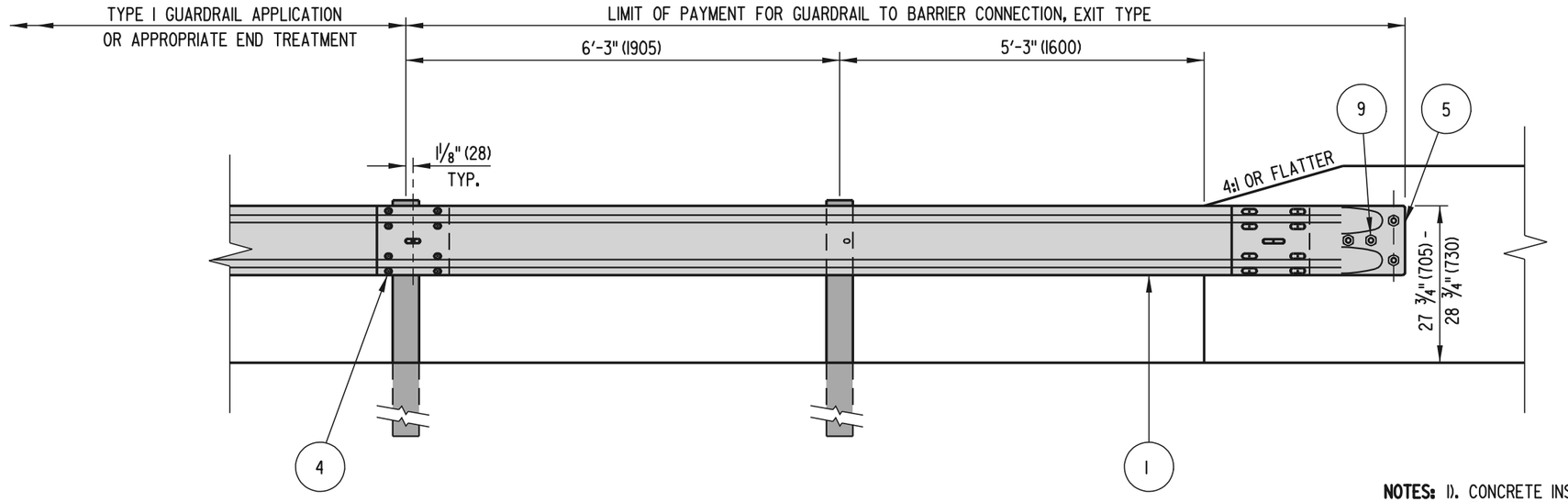

ELEVATION

NOTES: 1). CONCRETE INSERTS MAY BE USED IN NEW CONSTRUCTION TO ATTACH TERMINAL CONNECTOR TO PARAPET,

2). GUARDRAIL SECTION AND TERMINAL CONNECTORS SHALL BE OVERLAPPED IN THE DIRECTION OF TRAVEL.

3). INSTALLATION SHOWN ABOVE WITH AN 'F-TYPE' BARRIER FACE. GUARDRAIL SECTION OF BARRIER CONNECTION SHALL BE ADJUSTED HORIZONTALLY IN ORDER TO MEET FLUSH AGAINST VARIOUS TYPES OF WALLS AND BARRIERS.

DELAWARE DEPARTMENT OF TRANSPORTATION	GUARDRAIL TO BARRIER CONNECTION, EXIT TYPE		APPROVED Carolann Wicks (CHIEF ENGINEER) 9/6/02 (DATE)
	STANDARD NO. B-9 (2002)	SHT. 1 OF 1	RECOMMENDED (DESIGN ENGINEER) 8/19/02 (DATE)

04/23/2002

SCALE : N.T.S.

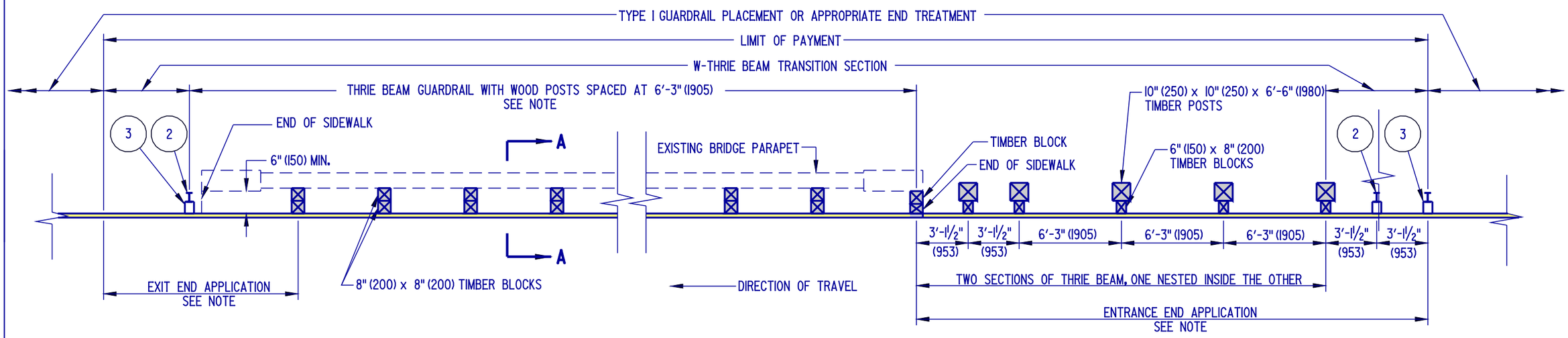

PLAN

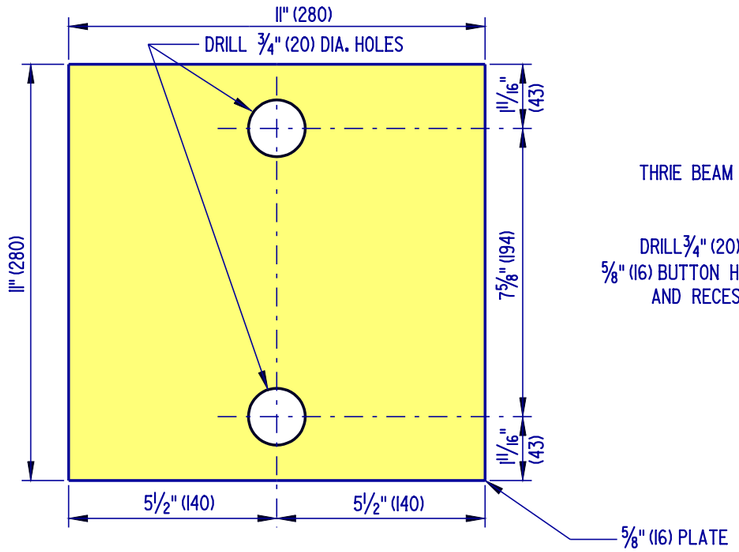

THRIE BEAM BEARING PLATE DETAIL

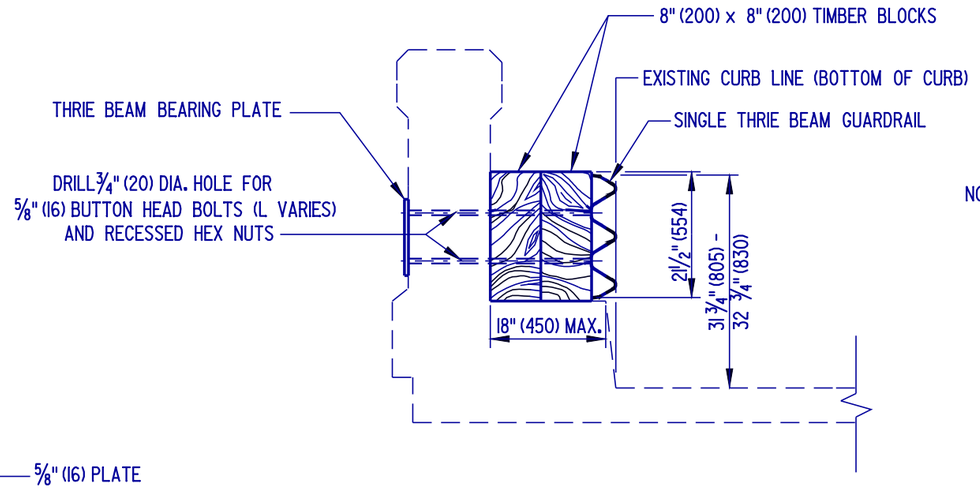

SECTION A-A

NOTES:
1). THIS INSTALLATION SHALL BE USED WHEN THE EXISTING SIDEWALK IS 18" (450) OR LESS.
2). USE A THRIE BEAM EXPANSION SECTION AT BRIDGE EXPANSION JOINTS.
3). PLACE GUARDRAIL REFLECTOR IN THE UPPER VALLEY OF THE THRIE BEAM EVERY FIFTH POST.
4). TIMBER BLOCK THICKNESS SHALL BE ADJUSTED TO ALLOW FACE OF THE THRIE BEAM TO BE FLUSH WITH BOTTOM OF CURB (MINIMUM THICKNESS SHALL BE 4" (100)).
5). THE EXIT END APPLICATION SHALL BE USED ONLY ON DIVIDED HIGHWAYS. FOR ALL OTHER SITUATIONS, THE ENTRANCE END APPLICATION SHALL BE USED ON BOTH ENDS OF THE BRIDGE PARAPET.
6). SPACING OF WOOD POSTS MAY NEED TO BE REDUCED TO ACCOMMODATE LINING UP POSTS AT THE END OF THE PARAPET.

DELAWARE
DEPARTMENT OF TRANSPORTATION

BRIDGE RAIL RETROFIT, TYPE 1

STANDARD NO. B-10 (2004) | SHT. 1 OF 1

APPROVED Carolann Wicks CHIEF ENGINEER 1/10/05 DATE

RECOMMENDED Dennis M. O'Toole DESIGN ENGINEER 1/3/05 DATE

12/08/2004

SCALE : N.T.S.

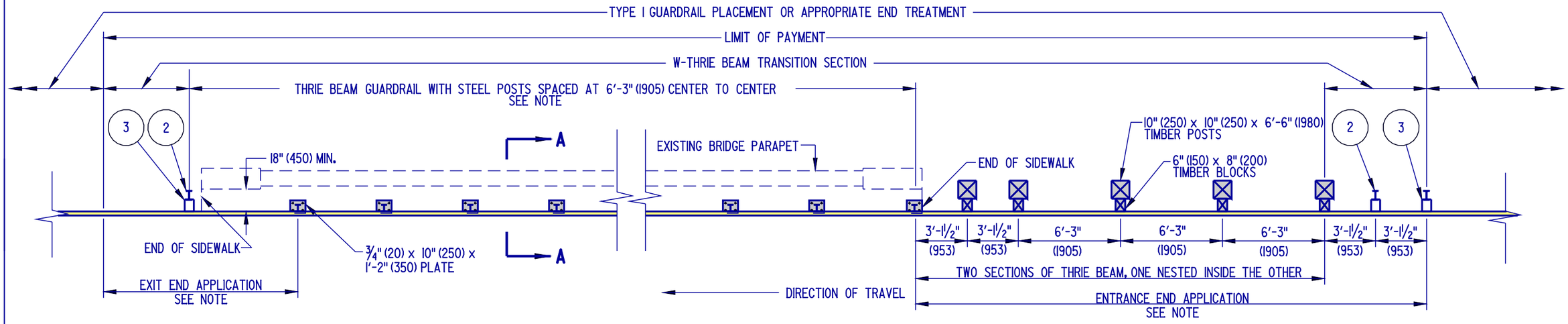

PLAN

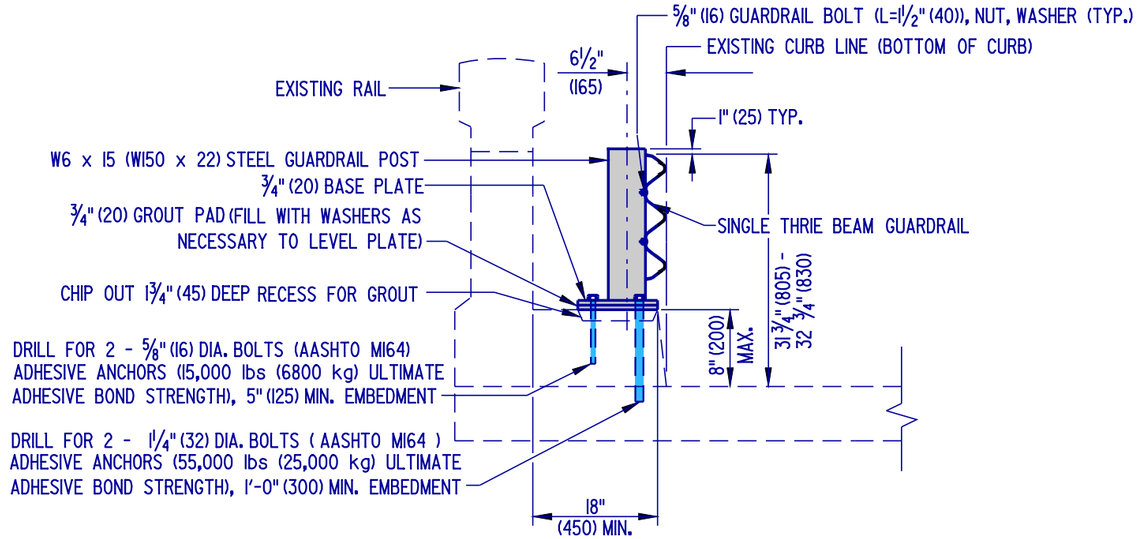

SECTION A-A

NOTES:
1). THIS INSTALLATION SHALL BE USED WHEN THE EXISTING SIDEWALK IS 18" (450) OR WIDER, AND DEAD LOAD CONSIDERATIONS ARE A CONCERN WHEN USING BRIDGE RAIL RETROFIT, TYPE 3.
2). ADHESIVE ANCHORS SHALL BE INSTALLED PER MANUFACTURER'S SPECIFICATIONS AND SHALL BE GALVANIZED.
3). USE A THRIE BEAM EXPANSION SECTION AT BRIDGE EXPANSION JOINTS.
4). PLACE GUARDRAIL REFLECTOR IN THE UPPER VALLEY OF THE THRIE BEAM EVERY FIFTH POST.
5). THE EXIT END APPLICATION SHALL BE USED ONLY ON DIVIDED HIGHWAYS. FOR ALL OTHER SITUATIONS, THE ENTRANCE END APPLICATION SHALL BE USED ON BOTH ENDS OF THE BRIDGE PARAPET.
6). SPACING OF STEEL POSTS MAY NEED TO BE REDUCED TO ACCOMMODATE LINING UP POSTS AT THE END OF THE PARAPET.

DELAWARE
DEPARTMENT OF TRANSPORTATION

BRIDGE RAIL RETROFIT, TYPE 2

STANDARD NO. B-11 (2004) | SHT. 1 OF 4

APPROVED Carolann Wicks CHIEF ENGINEER 1/10/05 DATE

RECOMMENDED Dennis M. Office DESIGN ENGINEER 1/3/05 DATE

12/08/2004

SCALE : N.T.S.

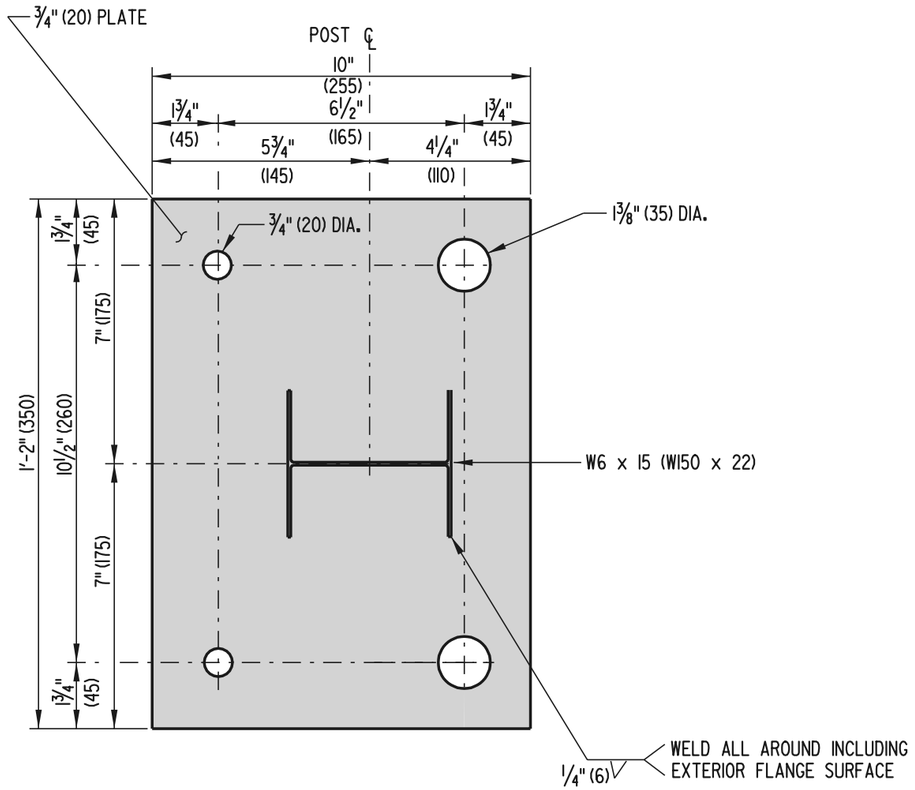

BASE PLATE DETAIL

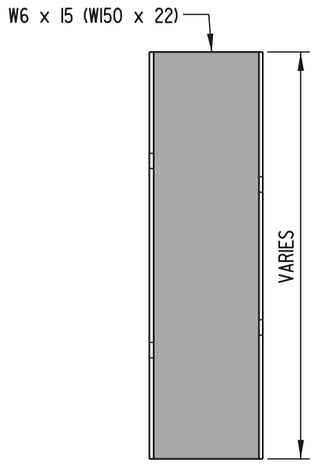

SIDE

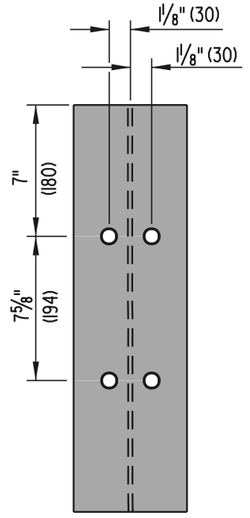

FRONT

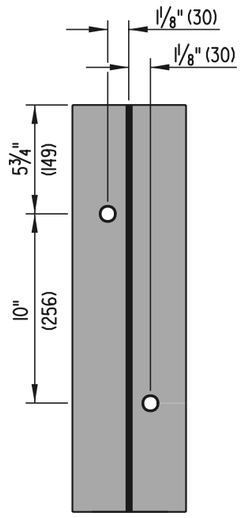

SECTION B-B

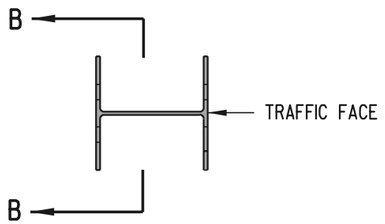

PLAN

W6 x 15 (W150 x 22) STEEL GUARDRAIL POST

DELAWARE DEPARTMENT OF TRANSPORTATION	BRIDGE RAIL RETROFIT, TYPE 2			APPROVED _____ CHIEF ENGINEER DATE 6/18/01
	STANDARD NO. B-11 (2001)	SHT. 2	OF 2	RECOMMENDED _____ DESIGN ENGINEER DATE 6/15/01

04/05/2001

SCALE : N.T.S.

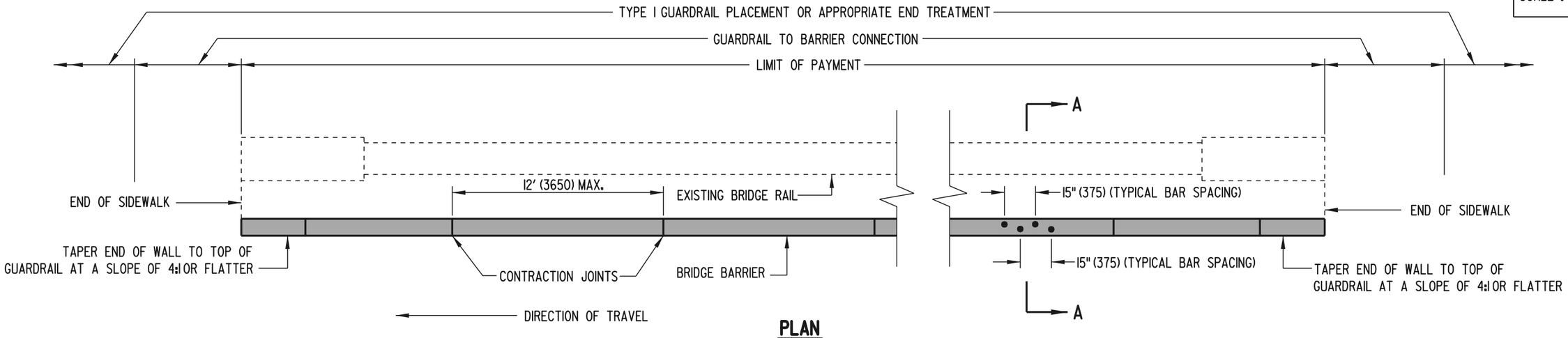

PLAN

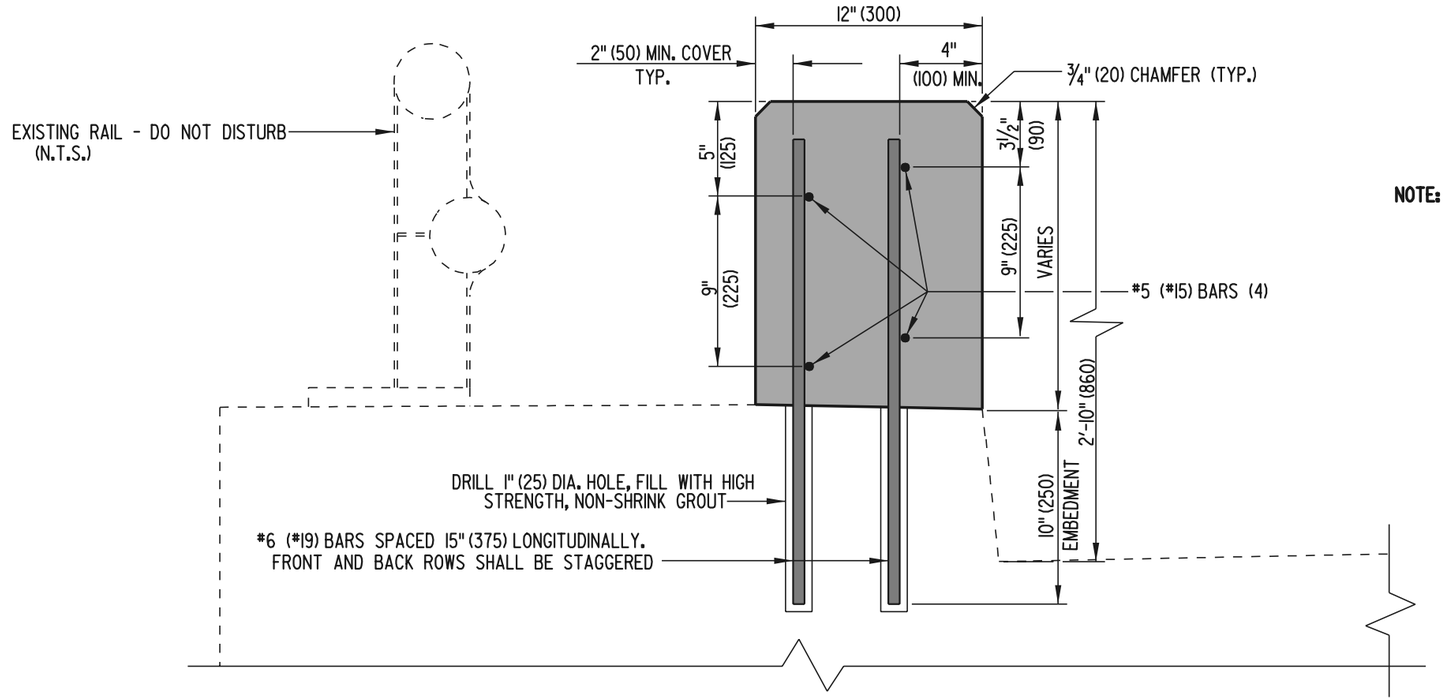

SECTION A-A

NOTE: STANDARD GUARDRAIL TO BARRIER CONNECTIONS SHALL BE CONNECTED TO THE ENDS OF THE NEW BRIDGE BARRIER AND TRANSITIONED TO THE EXISTING GUARDRAIL.

DELAWARE DEPARTMENT OF TRANSPORTATION	BRIDGE RAIL RETROFIT, TYPE 3		APPROVED [signature] CHIEF ENGINEER 6/18/01 DATE
	STANDARD NO. B-12 (2001)	SHT. 1 OF 1	RECOMMENDED [signature] DESIGN ENGINEER 6/15/01 DATE

05/21/2001

SCALE : N.T.S.

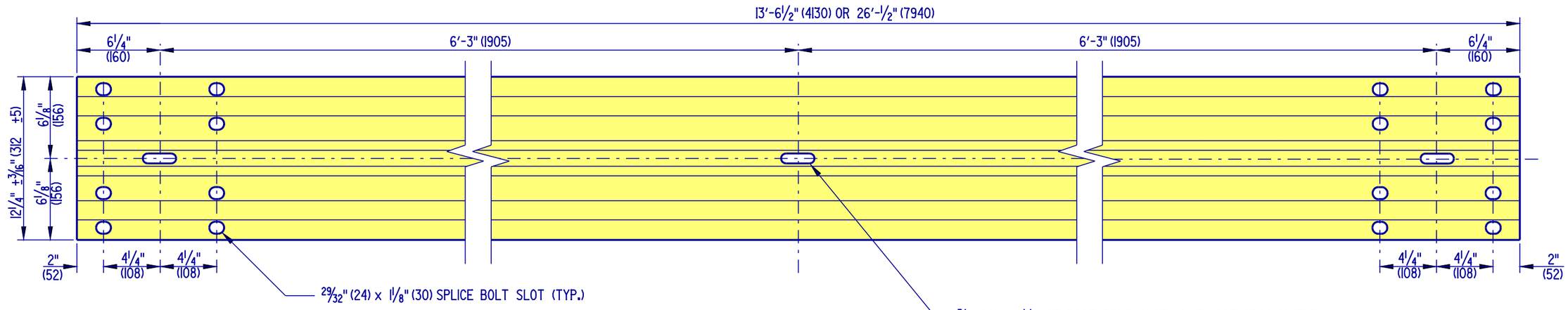

W-BEAM ELEVATION

1

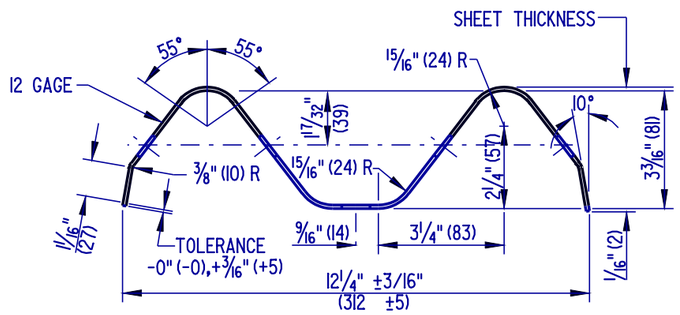

W-BEAM SECTION

NOTES: 1). TWO ADDITIONAL ¾" (20) x 2½" (65) SLOTS SHALL BE PROVIDED AT 6'-3" (1905) SPACING FOR BEAM LENGTH OF 26'-½" (7940).

DELAWARE DEPARTMENT OF TRANSPORTATION	HARDWARE		APPROVED Carolann Wicks CHIEF ENGINEER 1/10/05 DATE
	STANDARD NO. B-13 (2004)	SHT. 1 OF 13	RECOMMENDED Dennis M. Office DESIGN ENGINEER 1/3/05 DATE

09/21/2004

SCALE : N.T.S.

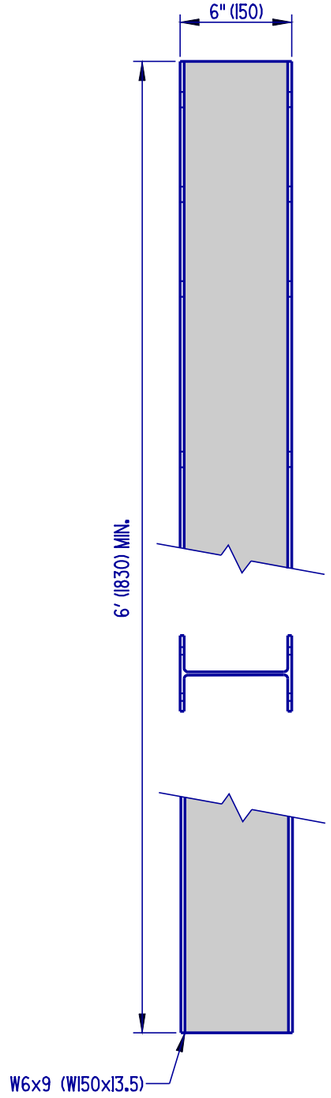

SIDE

NOTE:
WHERE CONDITIONS REQUIRE,
ALTERNATE LENGTHS IN INCREMENTS
OF 6" (150) MAY BE USED.

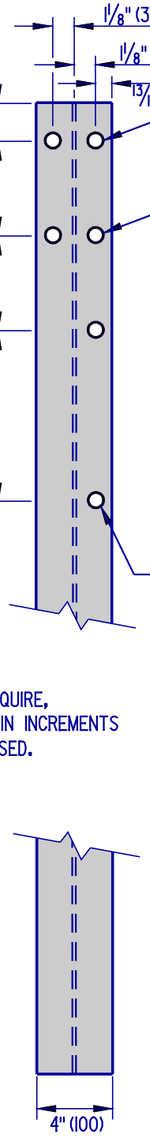

FRONT

POST (2)

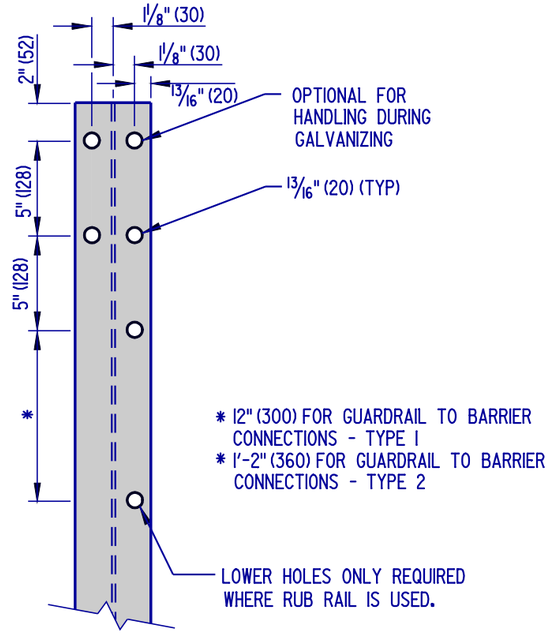

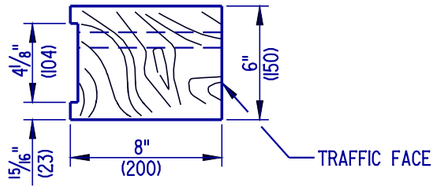

TOP

SIDE

FRONT

OFFSET BLOCK (3)

NOTE : ALL HOLES SHALL BE 13/16" (20) DIA. BOLT HOLE PATTERN IS SYMMETRICAL WITH RESPECT TO THE VERTICAL AXIS OF THE POST.

W-BEAM STEEL POST AND WOOD OFFSET BLOCK

DELAWARE
DEPARTMENT OF TRANSPORTATION

HARDWARE

STANDARD NO. B-13 (2004) | SHT. 2 OF 13

APPROVED Carolann Wicks CHIEF ENGINEER 1/10/05 DATE

RECOMMENDED Dennis M. O'Toole DESIGN ENGINEER 1/3/05 DATE

09/28/2004

SCALE : N.T.S.

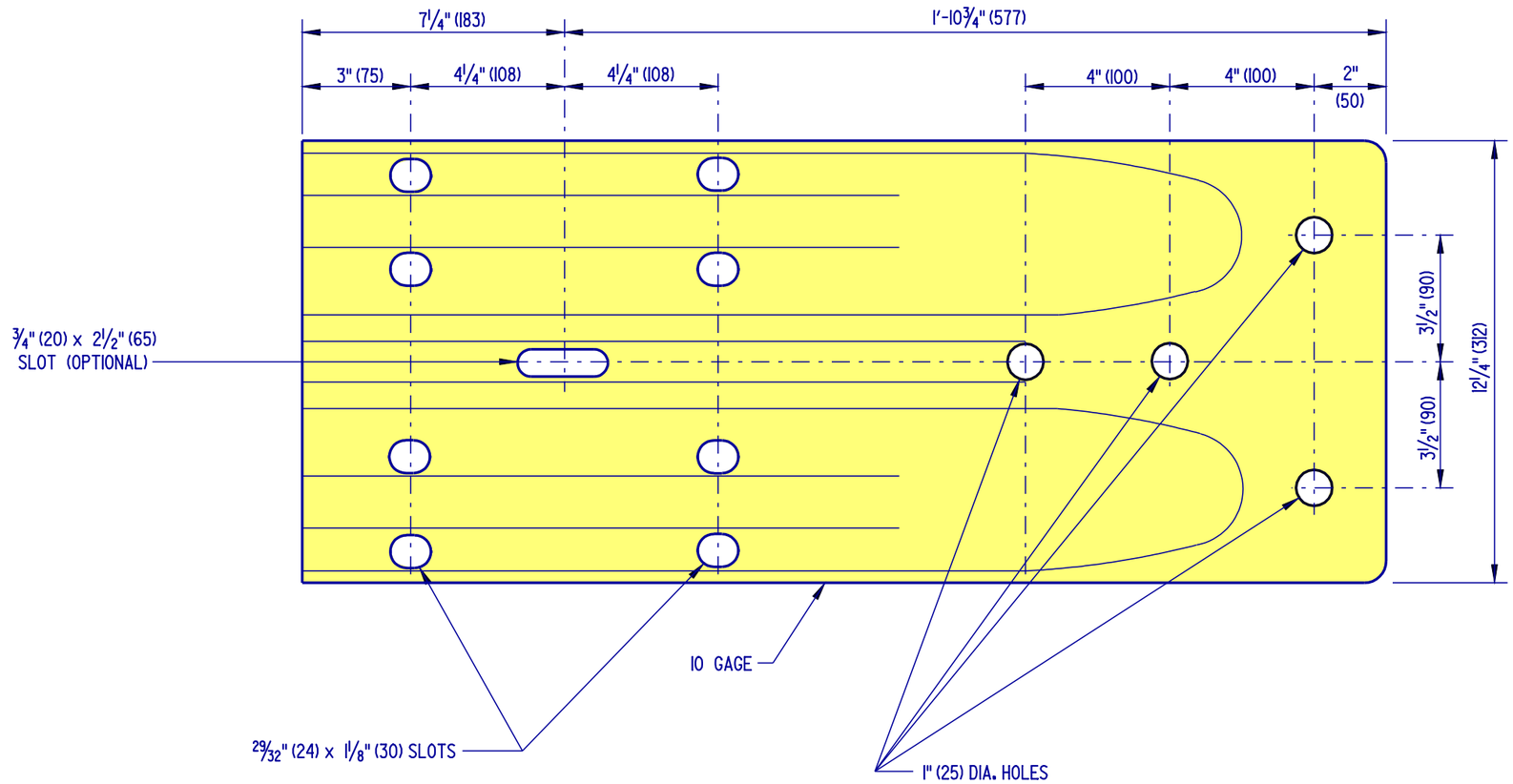

ELEVATION

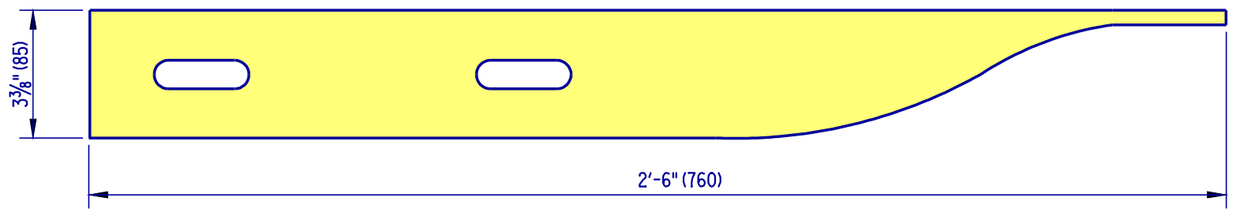

PLAN

W-BEAM TERMINAL CONNECTOR (5)

DELAWARE DEPARTMENT OF TRANSPORTATION	HARDWARE		APPROVED Carolann Wicks CHIEF ENGINEER 1/10/05 DATE
	STANDARD NO. B-13 (2004)	SHT. 3 OF 13	RECOMMENDED Dennis M. O'Toole DESIGN ENGINEER 1/3/05 DATE

09/27/2004

SCALE : N.T.S.

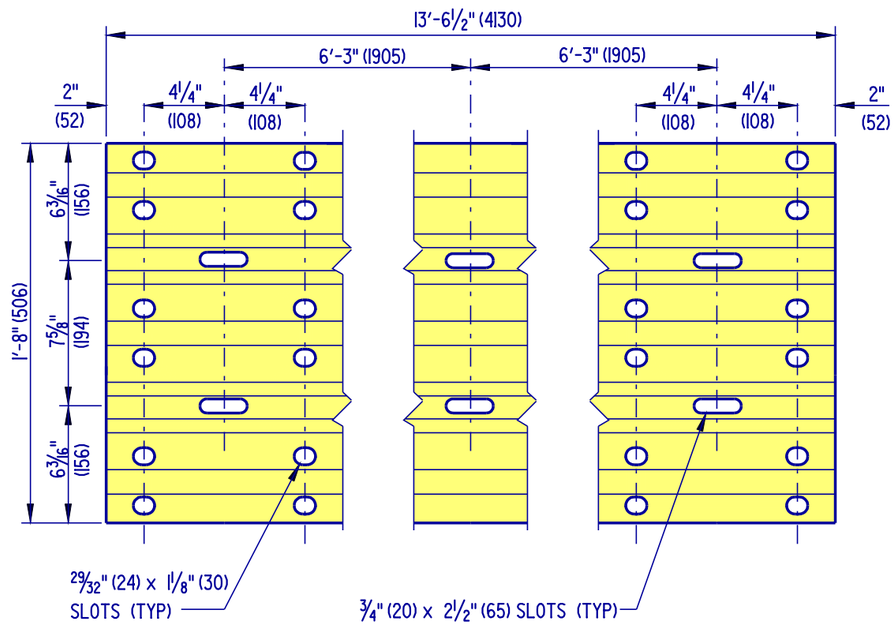

THRIE BEAM ELEVATION

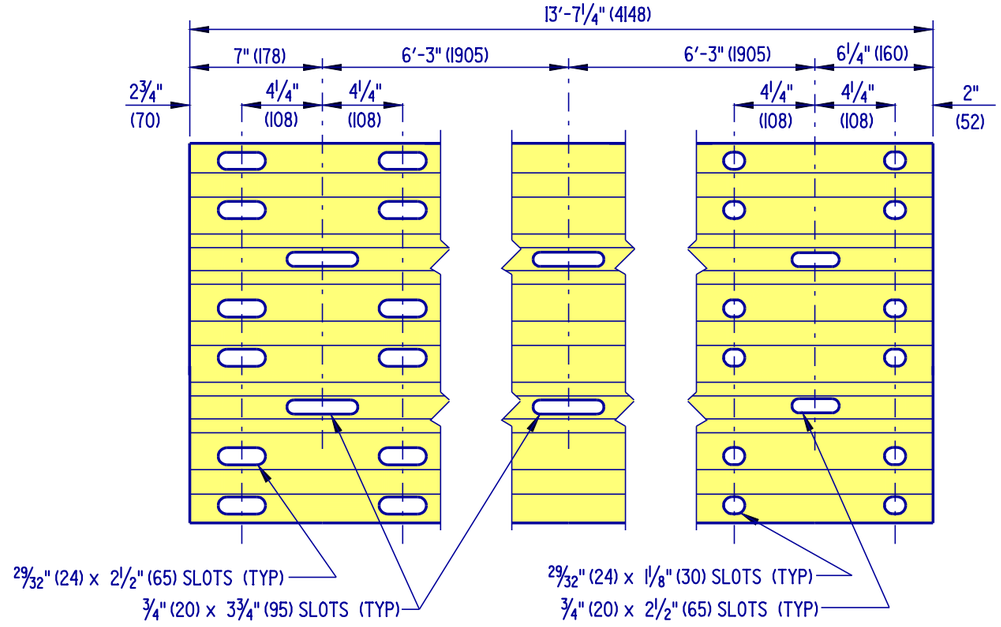

THRIE BEAM EXPANSION ELEMENT

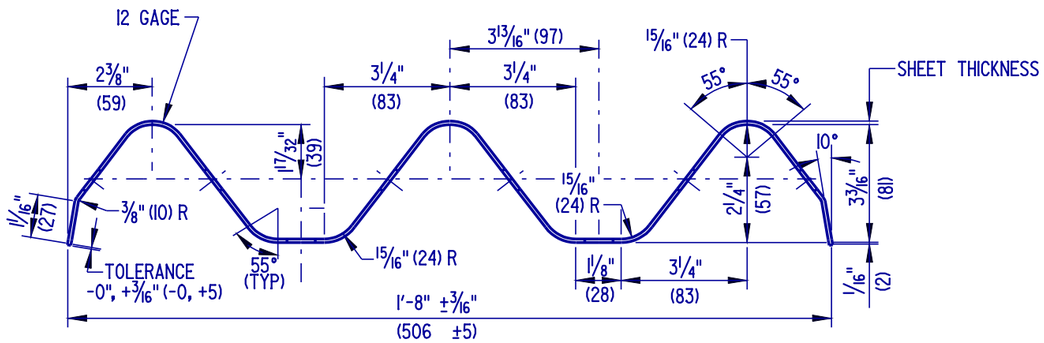

THRIE BEAM SECTION

DELAWARE DEPARTMENT OF TRANSPORTATION	HARDWARE		APPROVED Carolann Wicks CHIEF ENGINEER 1/10/05 DATE
	STANDARD NO. B-13 (2004)	SHT. 4 OF 13	RECOMMENDED Dennis M. O'Toole DESIGN ENGINEER 1/3/05 DATE

09/28/2004

SCALE : N.T.S.

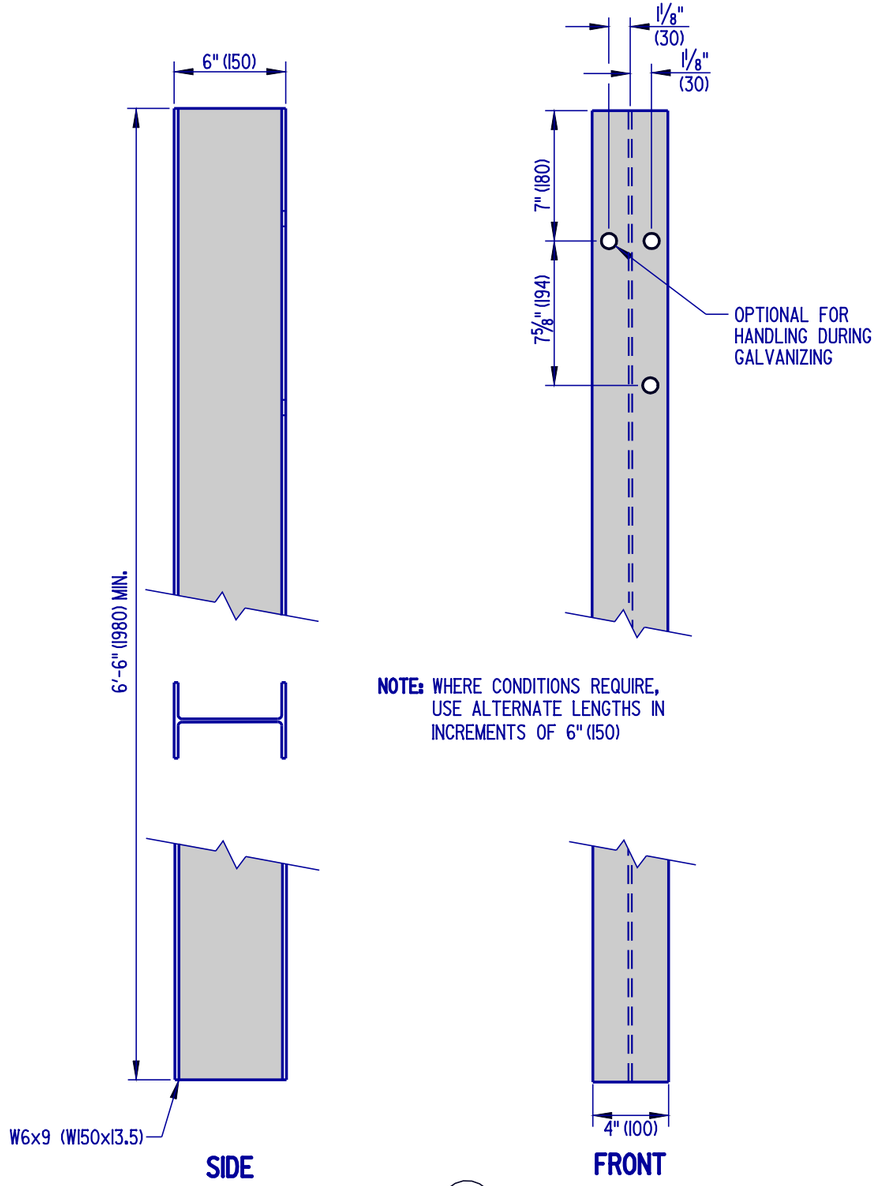

NOTE: WHERE CONDITIONS REQUIRE, USE ALTERNATE LENGTHS IN INCREMENTS OF 6" (150)

POST (2)

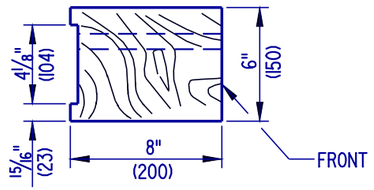

TOP

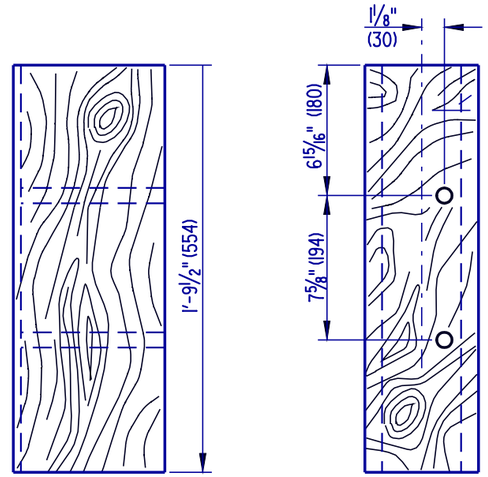

OFFSET BLOCK (3)

THRIE BEAM STEEL POST AND WOOD OFFSET BLOCK

NOTE :
ALL HOLES SHALL BE 13/16" (20) DIA. BOLT HOLE PATTERN IS SYMMETRICAL WITH RESPECT TO THE VERTICAL AXIS OF THE POST.

DELAWARE DEPARTMENT OF TRANSPORTATION	HARDWARE		APPROVED Carolann Wicks CHIEF ENGINEER 1/10/05 DATE
	STANDARD NO. B-13 (2004)	SHT. 5 OF 13	RECOMMENDED Dennis M. O'Toole DESIGN ENGINEER 1/3/05 DATE

09/28/2004

SCALE : N.T.S.

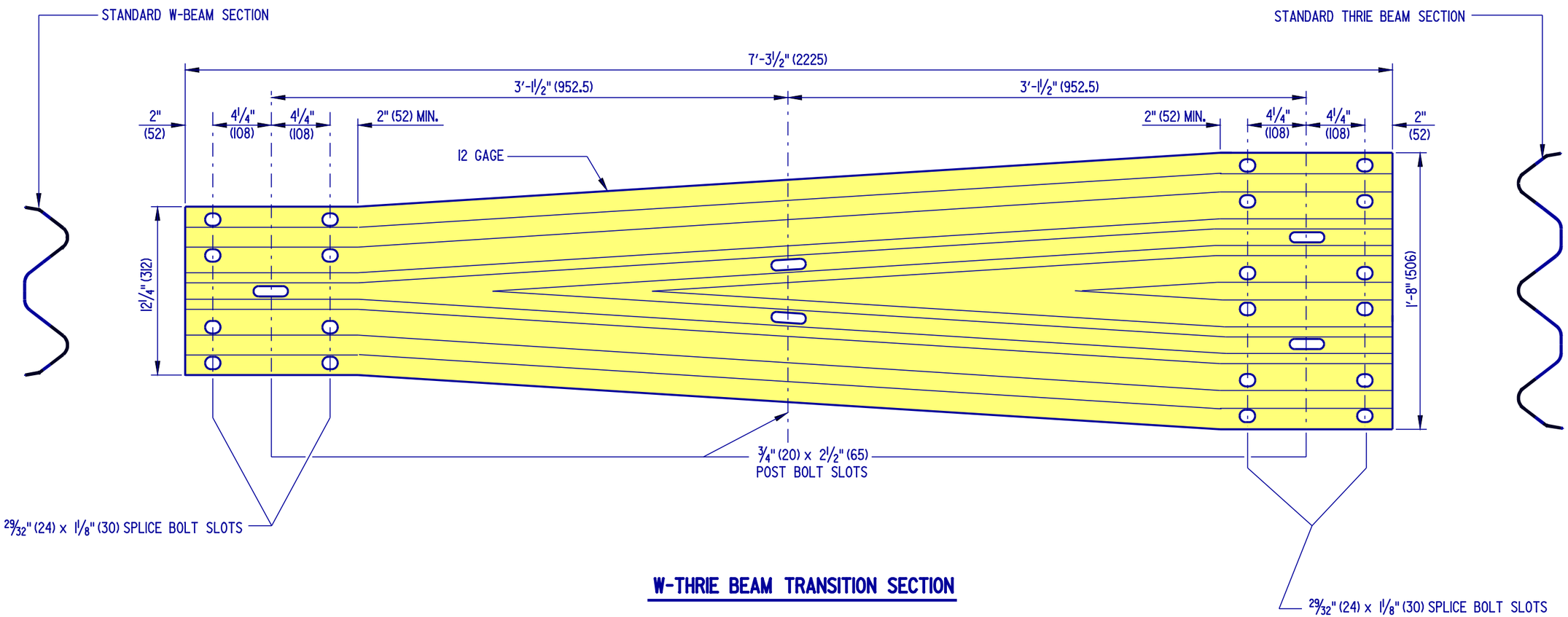

W-THRIE BEAM TRANSITION SECTION

DELAWARE DEPARTMENT OF TRANSPORTATION	HARDWARE	APPROVED Carolann Wicks (CHIEF ENGINEER) 1/10/05 (DATE)
	STANDARD NO. B-13 (2004) SHT. 6 OF 13	RECOMMENDED Dennis M. O'Toole (DESIGN ENGINEER) 1/3/05 (DATE)

09/10/2004

SCALE : N.T.S.

NOTES : 1). ALL HOLES SHALL BE DRILLED PRIOR TO GALVANIZING.
2). ALL WOOD SIZES ARE NOMINAL DIMENSIONS.
3). POSTS SHOULD BE PLACED SO THAT BREAKAWAY HOLES ARE NO LOWER THAN GROUND LEVEL AND NO HIGHER THAN 4" (100) ABOVE GROUND LEVEL.

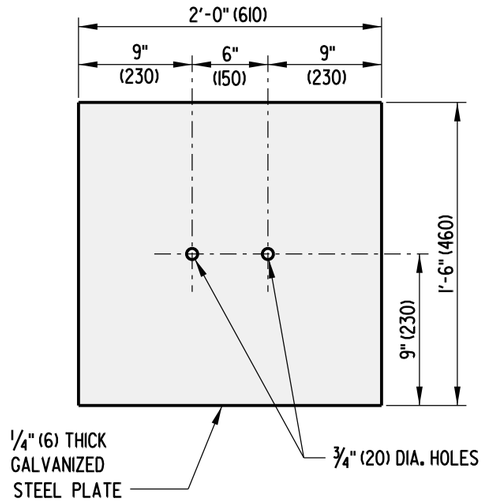

SOIL PLATE

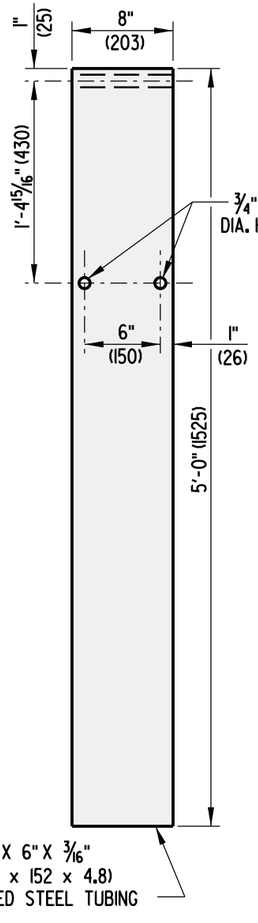

STEEL TUBE

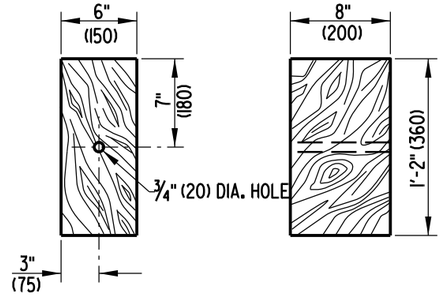

WOOD BLOCK

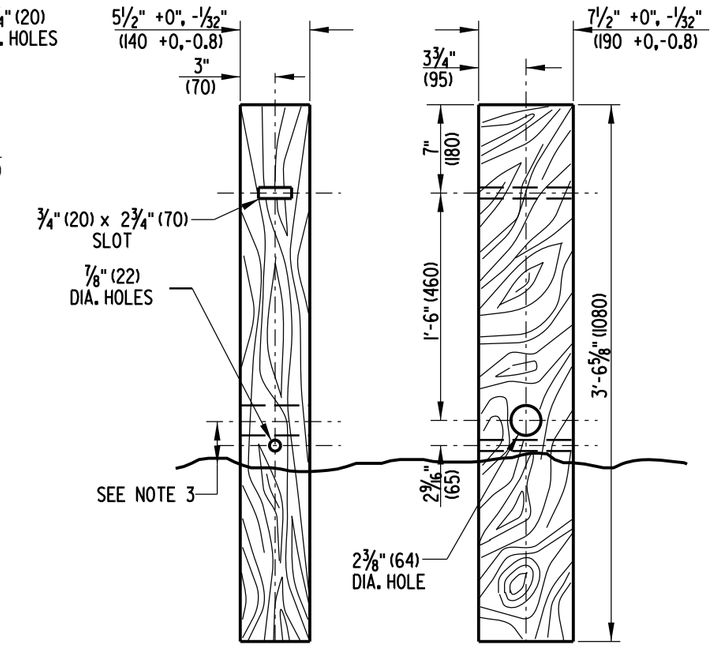

SHORT WOOD BREAKAWAY POST

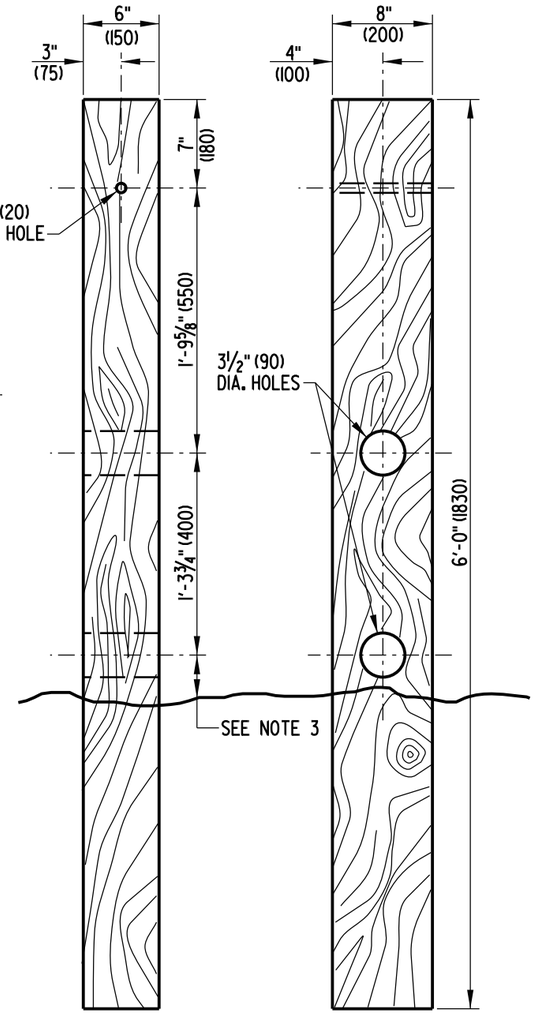

LONG WOOD BREAKAWAY POST

DELAWARE DEPARTMENT OF TRANSPORTATION	HARDWARE			APPROVED CHIEF ENGINEER 11/18/08 DATE
	STANDARD NO. B-13 (2008)	SHT. 7 OF 13		RECOMMENDED DESIGN ENGINEER 11/17/08 DATE

07/14/2008

SCALE : N.T.S.

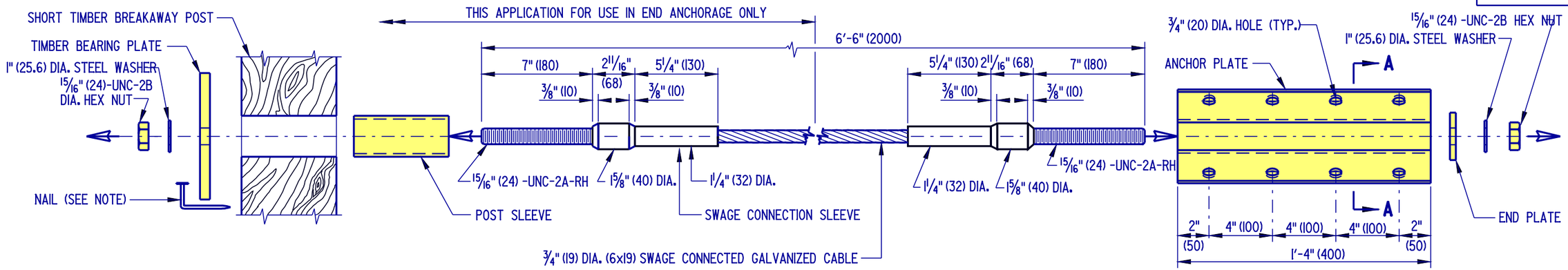

SWAGED CABLE ASSEMBLAGE AND RELATED HARDWARE ASSEMBLY

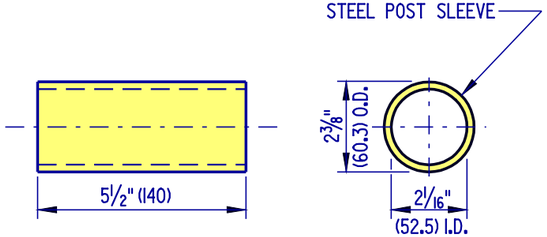

POST SLEEVE

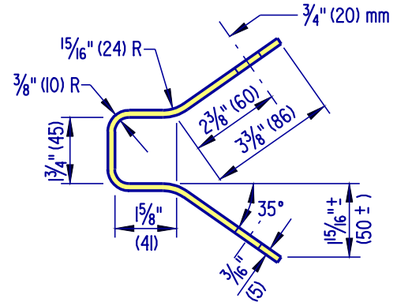

SECTION A-A

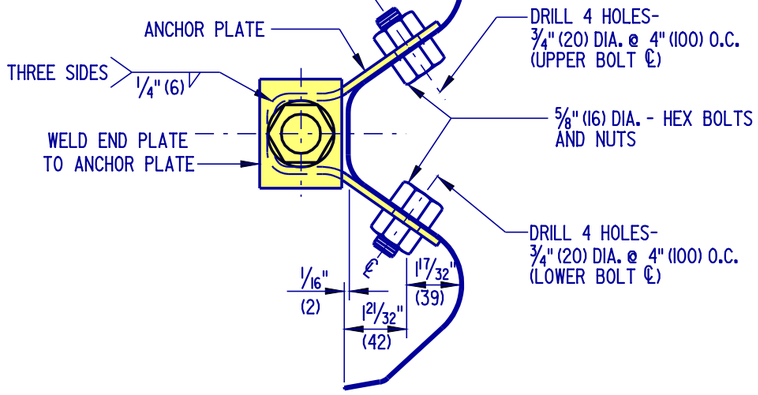

ANCHOR PLATE TO W-BEAM CONNECTION DETAIL

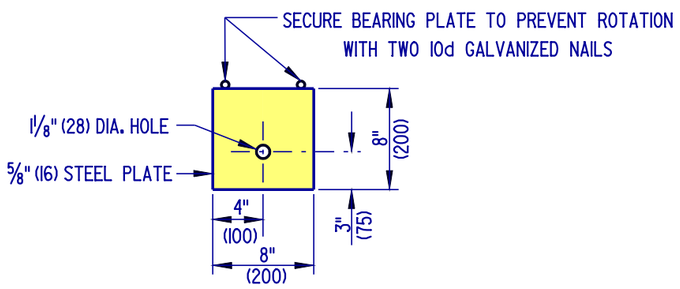

TIMBER BEARING PLATE

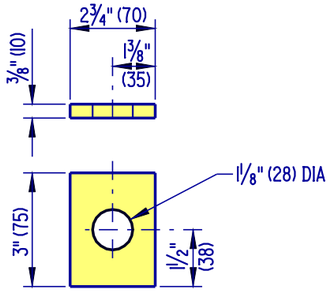

END PLATE

NOTES: 1). TO ENSURE THAT THE TIMBER BEARING PLATE REMAINS IN POSITION, 2 - 10d GALVANIZED STEEL NAILS SHALL BE DRIVEN IN THE SHORT TIMBER BREAKAWAY POST, AND BENT OVER BEARING PLATE.

2). TIGHTEN ASSEMBLY UNTIL CABLE IS TAUGHT.

3). ALL HOLES SHALL BE DRILLED PRIOR TO GALVANIZING.

DELAWARE DEPARTMENT OF TRANSPORTATION	HARDWARE	APPROVED Carolann Wicks CHIEF ENGINEER 1/10/05 DATE
	STANDARD NO. B-13 (2004) SHT. 8 OF 13	RECOMMENDED Dennis M. O'Toole DESIGN ENGINEER 1/3/05 DATE

09/21/2004

SCALE : N.T.S.

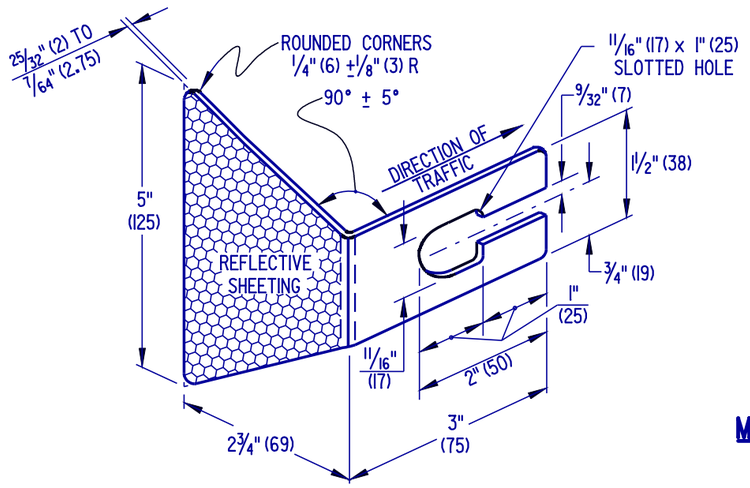

GUARDRAIL REFLECTOR

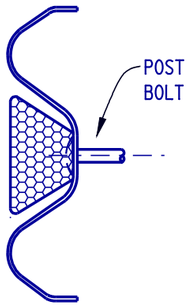

MOUNTING POSITION

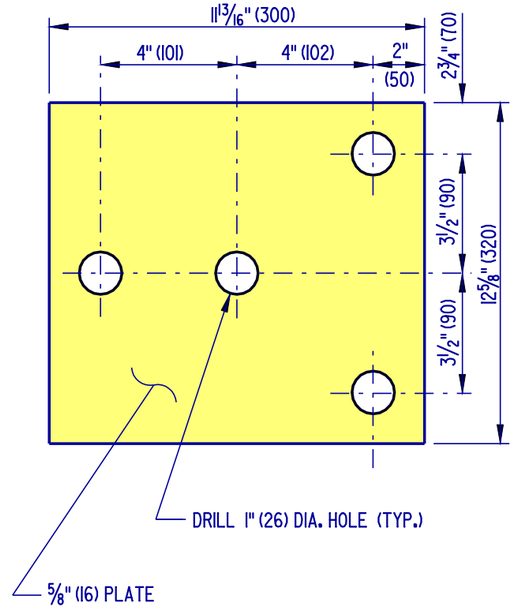

BEARING PLATE DETAIL (II)

DELAWARE DEPARTMENT OF TRANSPORTATION	HARDWARE		APPROVED Carolann Wicks CHIEF ENGINEER 1/10/05 DATE
	STANDARD NO. B-13 (2004)	SHT. 9 OF 13	RECOMMENDED Dennis M. O'Shea DESIGN ENGINEER 1/3/05 DATE

12/08/2004

SCALE : N.T.S.

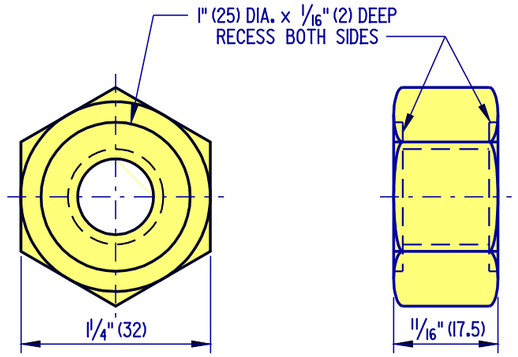

RECESSED NUT (FOR 5/8" (16) GUARDRAIL BOLT)

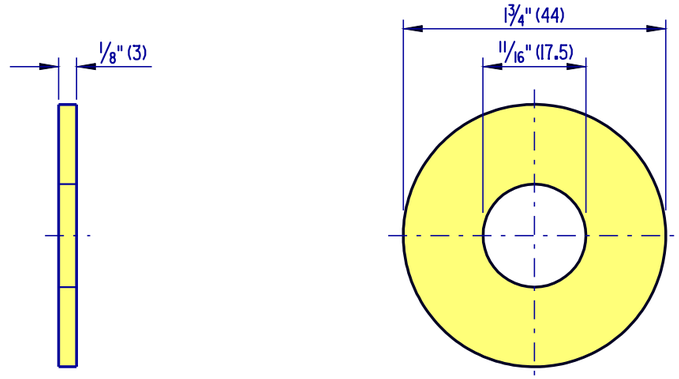

STEEL WASHER (FOR 5/8" (16) GUARDRAIL BOLT)

NOTE: DIMENSION FOR WASHER THICKNESS IS APPROXIMATE BASED ON METAL THICKNESS.

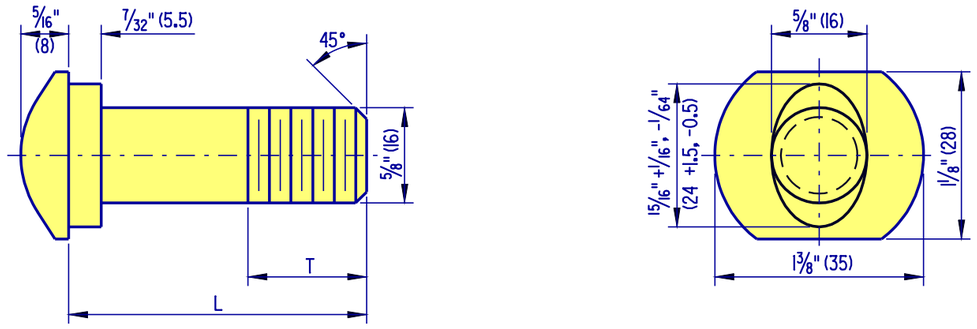

GUARDRAIL BOLT

L	T (MIN.)
1 1/4" (35)	FULL THREAD LENGTH
2" (50)	FULL THREAD LENGTH
4" (100)	FULL THREAD LENGTH
10" (255)	4" (100) THREAD LENGTH
18" (460)	4" (100) THREAD LENGTH

NOTES : 1. ALL FILLETS SHALL HAVE A MINIMUM RADIUS OF 1/16" (2).
2. IF THE BOLT EXTENDS MORE THAN 1/2" (12) BEYOND THE NUT, THE BOLT SHALL BE TRIMMED BACK AS PER THE DEPARTMENT'S SPECIFICATIONS.

DELAWARE
DEPARTMENT OF TRANSPORTATION

HARDWARE

STANDARD NO. B-13 (2004) | SHT. 10 OF 13

APPROVED Carolann Wicks CHIEF ENGINEER 1/10/05 DATE

RECOMMENDED Dennis M. Office DESIGN ENGINEER 1/3/05 DATE

09/23/2004

SCALE : N.T.S.

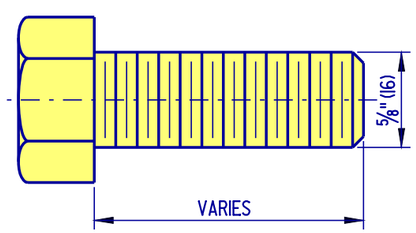

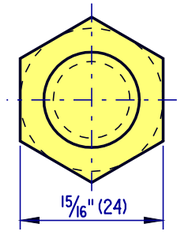

5/8" (16) HEX BOLT

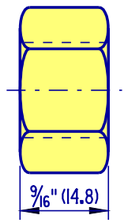

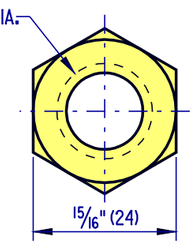

5/8" (16) HEX NUT

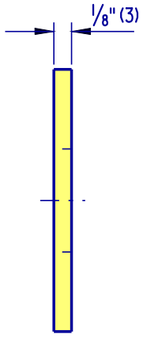

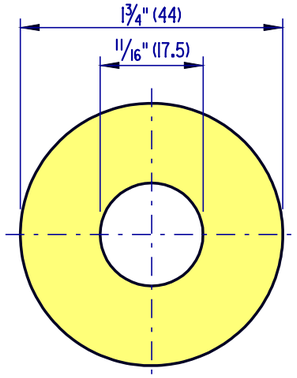

5/8" (16) STEEL WASHER

NOTE : DIMENSION FOR WASHER THICKNESS IS APPROXIMATE BASE METAL THICKNESS.

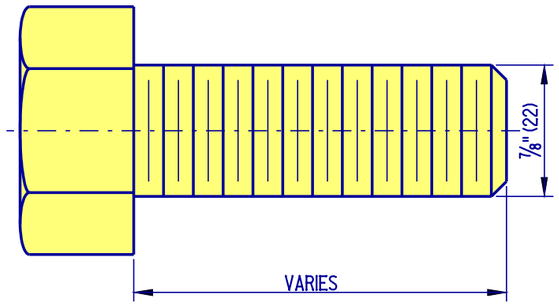

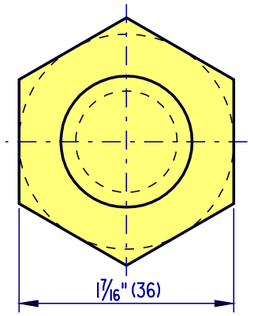

HIGH-STRENGTH STRUCTURAL HEX BOLT

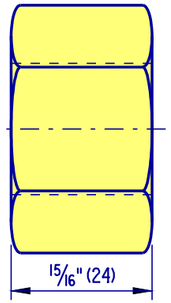

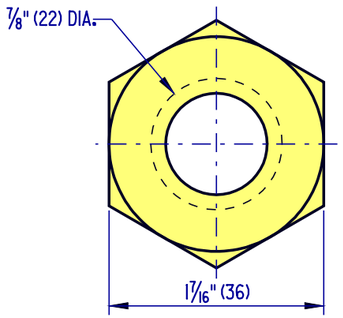

HIGH-STRENGTH STRUCTURAL HEX NUT

DELAWARE DEPARTMENT OF TRANSPORTATION	HARDWARE		APPROVED Carolann Wicks CHIEF ENGINEER 1/10/05 DATE
	STANDARD NO. B-13 (2004)	SHT. 11 OF 13	RECOMMENDED Dennis M. O'Toole DESIGN ENGINEER 1/3/05 DATE

09/21/2004

SCALE : N.T.S.

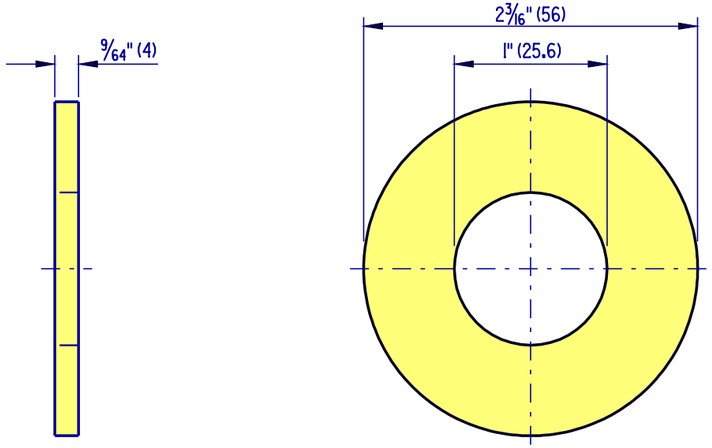

STEEL WASHER

NOTES : 1. FOR USE WITH SWAGED CABLE ASSEMBLAGE.
2. DIMENSION FOR WASHER THICKNESS IS APPROXIMATE BASE METAL THICKNESS.

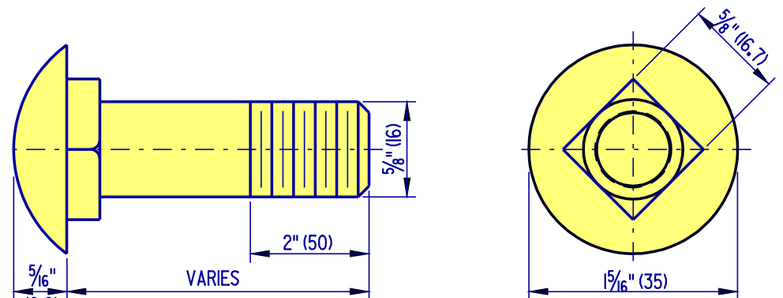

5/8" (16) CARRIAGE BOLT

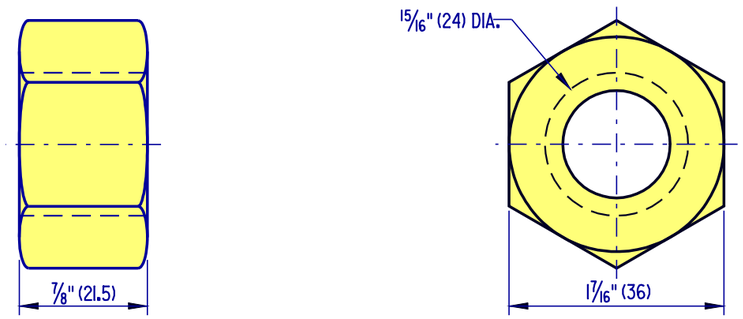

1 5/16" (24) HEX NUT

NOTE : FOR USE WITH SWAGED CABLE ASSEMBLAGE.

DELAWARE DEPARTMENT OF TRANSPORTATION	HARDWARE		APPROVED Carolann Wicks CHIEF ENGINEER 1/10/05 DATE
	STANDARD NO. B-13 (2004)	SHT. 12 OF 13	RECOMMENDED Dennis M. O'Toole DESIGN ENGINEER 1/3/05 DATE

09/10/2004

SCALE : N.T.S.

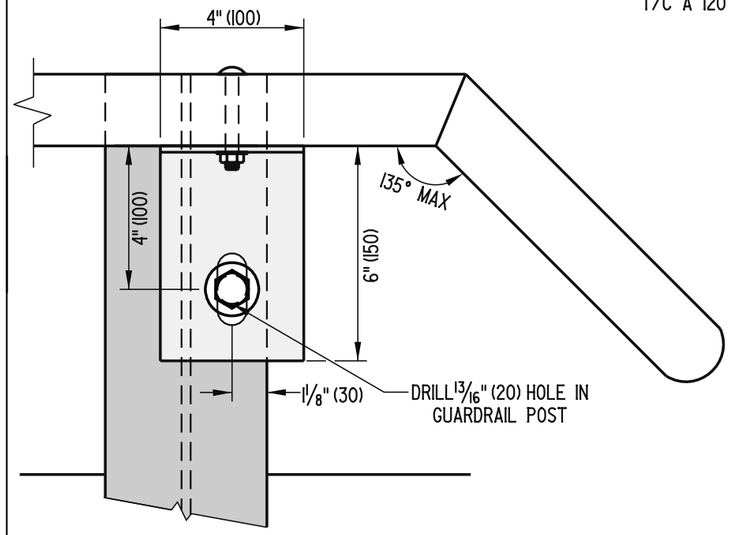

REAR VIEW WITH START & END SECTION

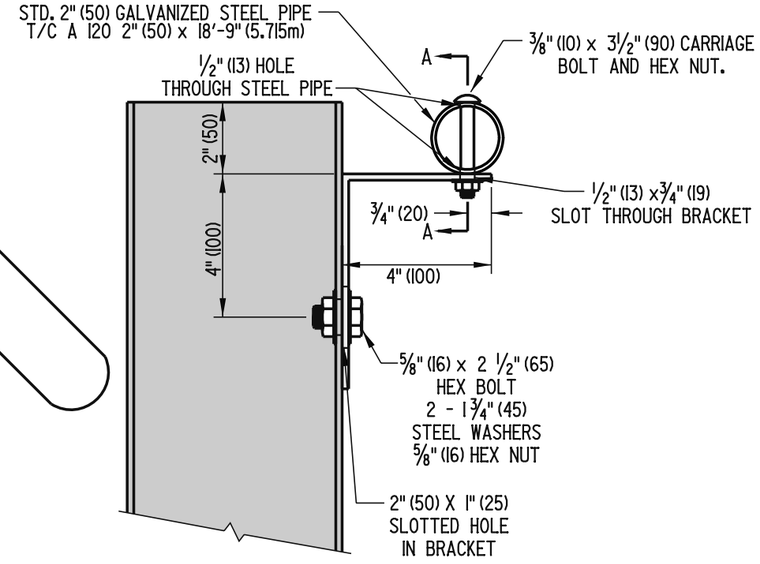

SIDE VIEW

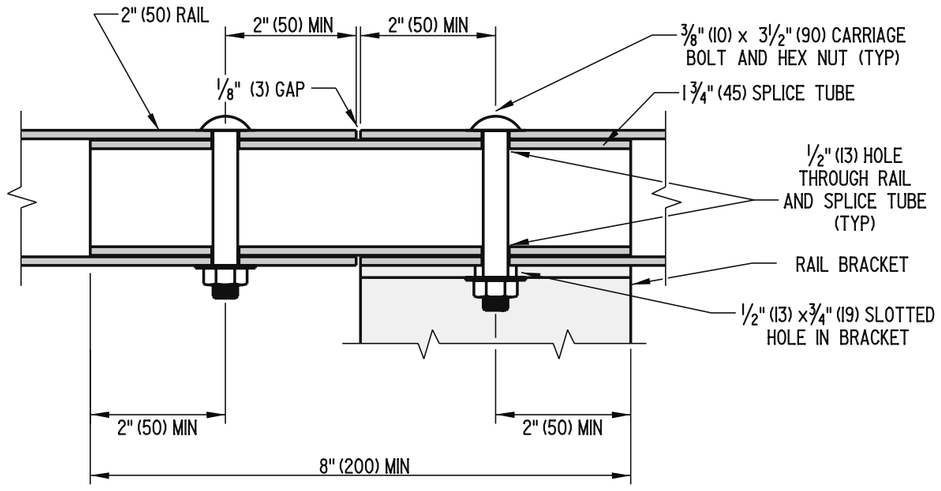

SECTION A-A AT RAIL SPLICE

NOTES:

1). RAIL SHALL BE MOUNTED ON GUARDRAIL ADJACENT TO A BIKEWAY OR SIDEWALK.
2). ALL COMPONENTS OF THE RAIL SHALL BE SHOP FABRICATED. ALL CUTTING AND DRILLING SHALL BE DONE IN THE SHOP.
3). ALL EXPOSED THREADED HARDWARE SHALL BE BURRED.
4). GUARDRAIL POSTS UPON WHICH RAIL IS TO BE INSTALLED SHALL BE SHOP DRILLED FOR THE RAIL BRACKETS DURING FABRICATION.
5). ALL RAIL SPLICES WILL BE AT RAIL SUPPORT BRACKETS, THE SAME BOLT USED TO ATTACH THE RAIL TO THE BRACKET WILL BE USED TO SECURE THE SPLICE TUBE.
6). RAILS SHALL BE INSTALLED ONLY ON STANDARD W-BEAM SECTIONS AND AT LEAST ONE POST AWAY FROM THE PAYMENT LIMITS OF THE END TREATMENT.

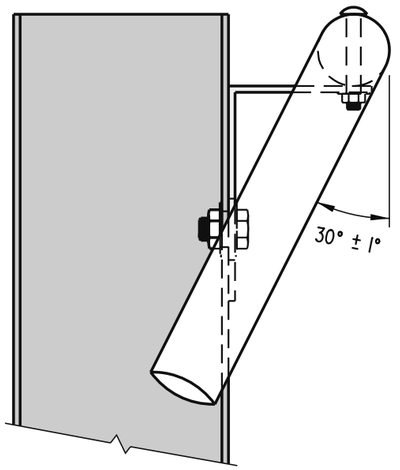

SIDE VIEW WITH START & END SECTION

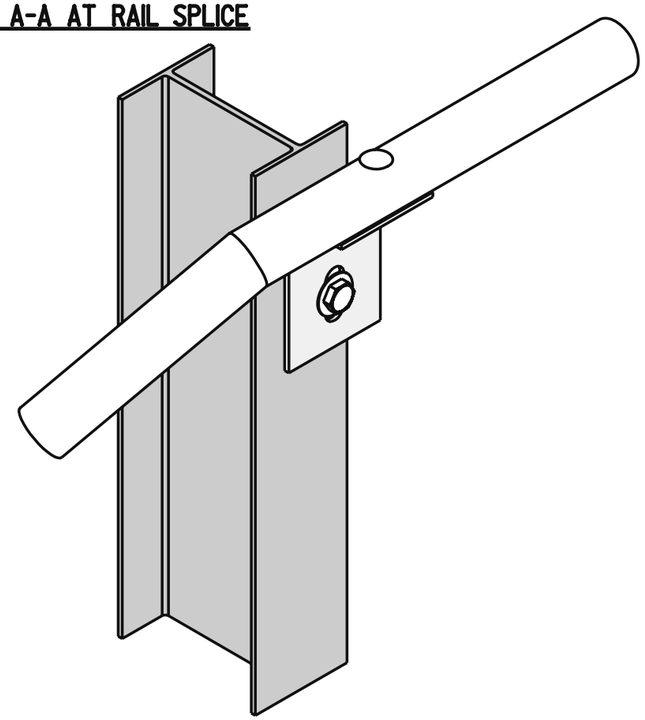

ISOMETRIC VIEW WITH START & END SECTION

DELAWARE
DEPARTMENT OF TRANSPORTATION

GUARDRAIL MOUNTED RAIL

STANDARD NO. B-13 (2005) | SHT. 13 OF 13

APPROVED Carolann Wicks CHIEF ENGINEER 12/5/05 DATE

RECOMMENDED James M. O'Neill DESIGN ENGINEER 11/29/05 DATE

01/19/2006

SCALE : N.T.S.

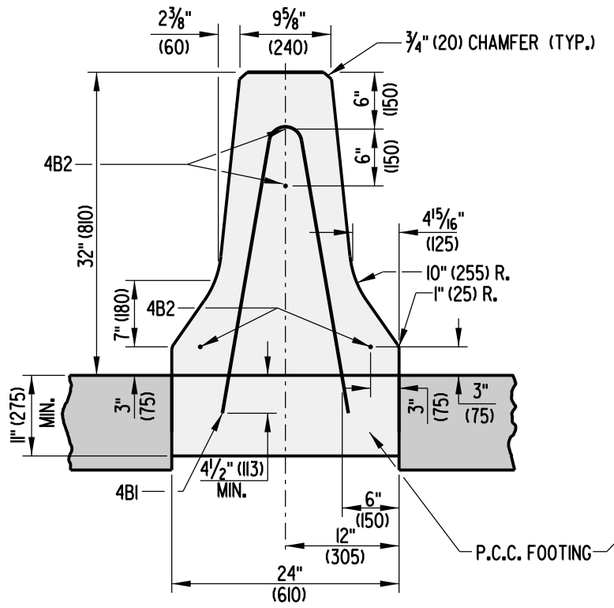

SECTION

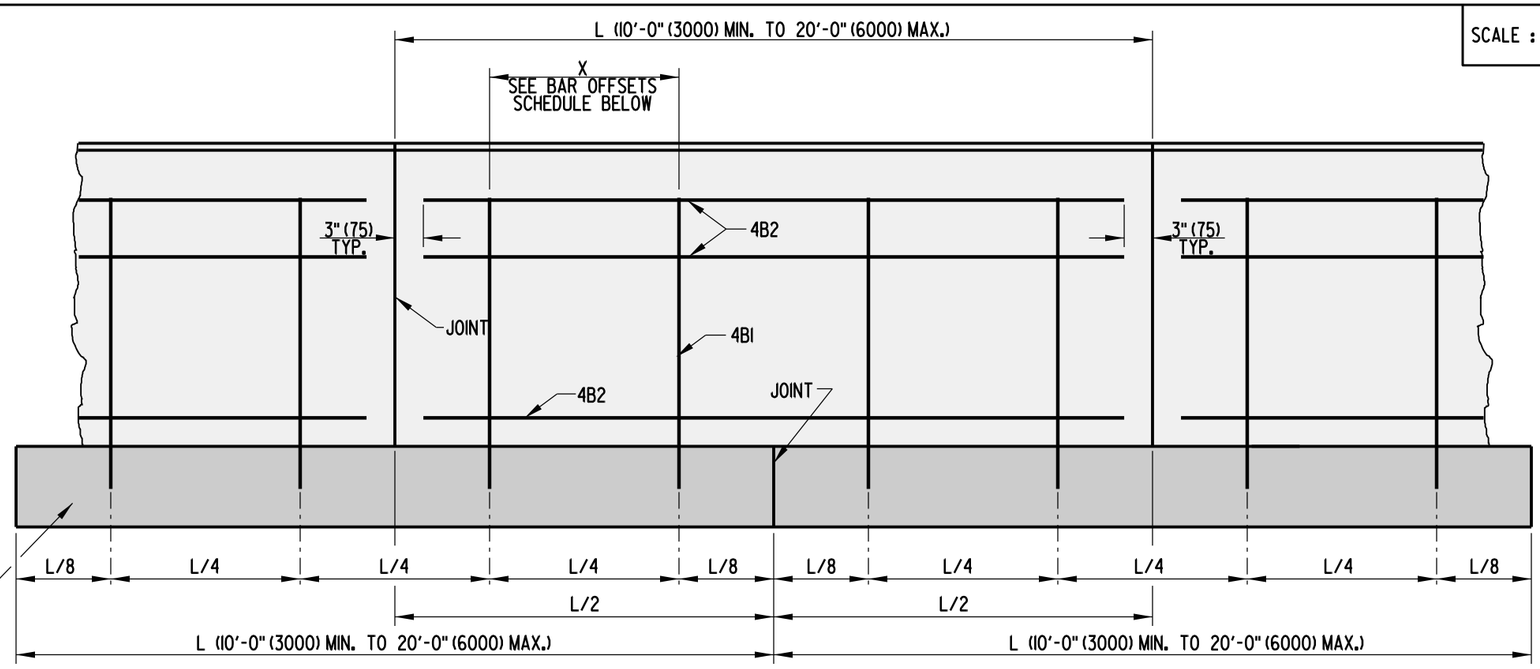

ELEVATION

TYPICAL CAST-IN-PLACE OR SLIP-FORM CONSTRUCTION

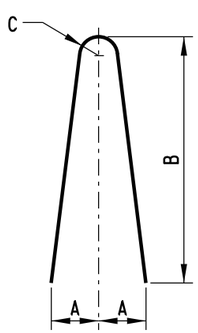

TYPE 'I' BAR

BAR OFFSETS		
NOMINAL LENGTH OF BARRIER SECTION (L)	X	NO. REQ'D FOR EACH BARRIER SECTION
20' (6000)	5' - 0" (1500)	4
18' (5500)	4' - 6" (1350)	4
16' (5000)	4' - 0" (1200)	4
14' (4500)	3' - 6" (1050)	4
12' (4000)	3' - 0" (900)	4
10' (3000)	2' - 6" (750)	4

BAR LIST							
MARK	SIZE	NUMBER IN EACH SECTION	LENGTH	TYPE	A	B	C
4BI	4 (13)	**	5'-4" (1625)	I	7" (175)	30½" (775)	2" (50)
4B2	4 (13)	4	*	STR.	N/A	N/A	N/A

* THE LENGTH OF BAR 4B2 SHALL BE 6" (150) SHORTER IN LENGTH THAN THE NOMINAL SIZE OF THE BARRIER IN WHICH IT IS USED.

** SEE "BAR OFFSETS" CHART ON THIS SHEET FOR MORE INFORMATION.

NOTES: 1). CONCRETE CLEAR COVER FOR REINFORCING BARS SHALL BE 1½" (40) MIN.
2). BARS SHALL BE CUT AT EVERY JOINT IF MADE USING CONTINUOUS SLIP-FORM CONSTRUCTION.

DELAWARE
DEPARTMENT OF TRANSPORTATION

32" (960) CONCRETE SAFETY BARRIER (F SHAPE)

STANDARD NO. B-14 (2009) | SHT. 1 OF 4

APPROVED SIGNATURE ON FILE (CHIEF ENGINEER) 01/19/2010 (DATE)

RECOMMENDED SIGNATURE ON FILE (DESIGN ENGINEER) 01/14/2010 (DATE)

12/21/2009

SCALE : N.T.S.

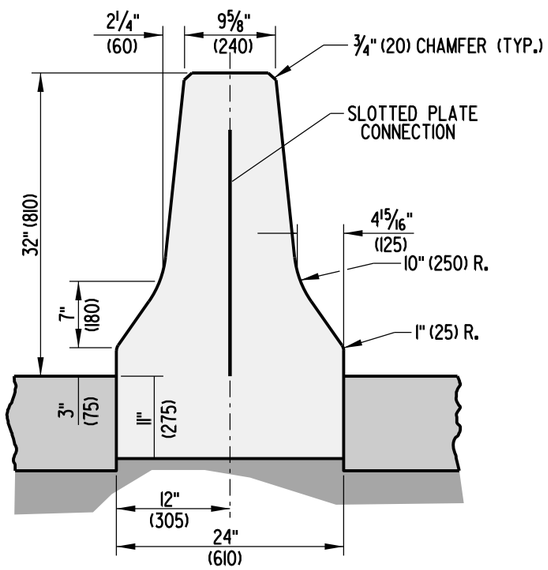

TYPICAL PRE-CAST CONSTRUCTON

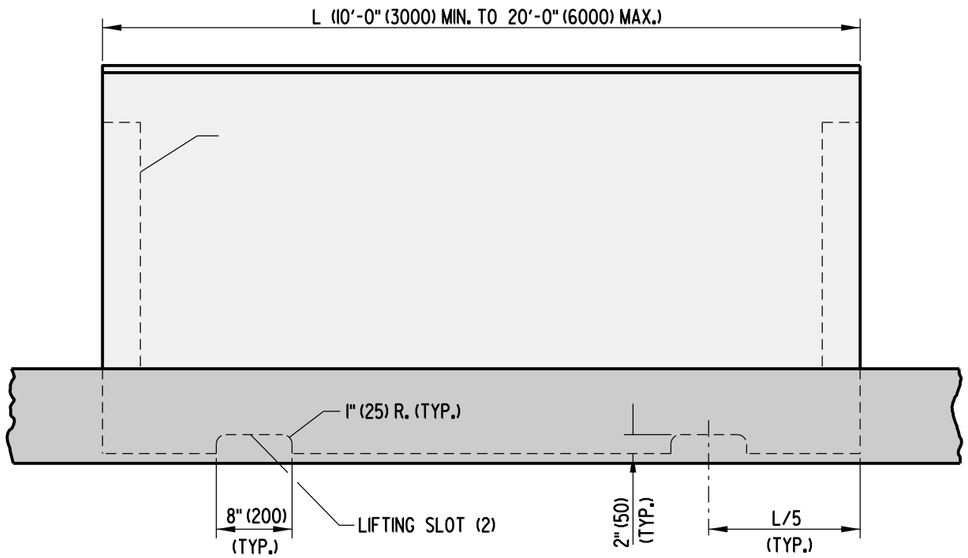

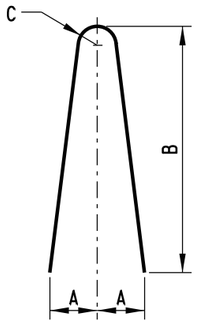

TYPE 'I' BAR

BAR OFFSETS		
NOMINAL LENGTH OF BARRIER UNIT	"X"	NO. REQ'D FOR EACH BARRIER UNIT
20' (6000)	6' - 11" (2100)	2
18' (5500)	6' - 5" (1950)	2
16' (5000)	5' - 11" (1800)	2
14' (4500)	7' - 0" (2250)	1
12' (4000)	6' - 0" (2000)	1
10' (3000)	5' - 0" (1500)	1

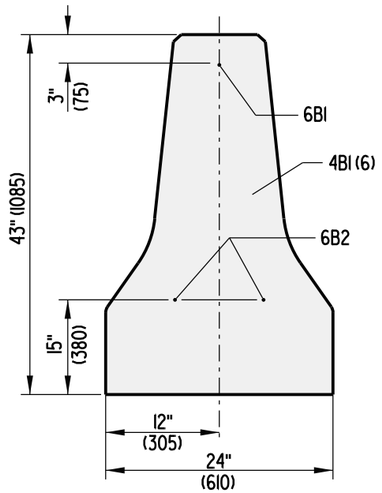

'F' SHAPE BARRIER SECTION

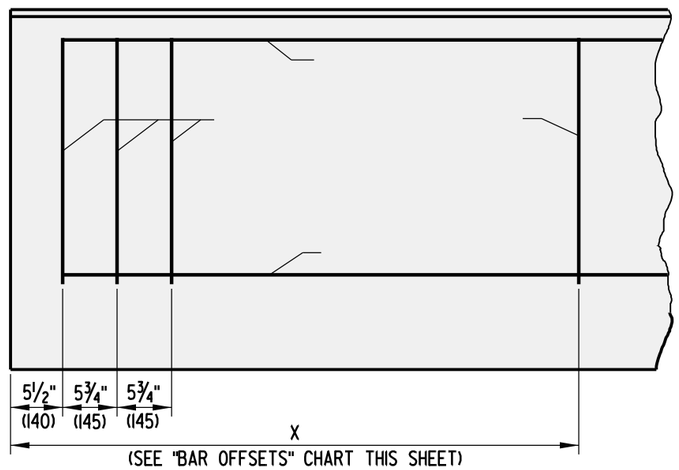

ELEVATION

BAR LIST							
MARK	SIZE	NUMBER IN EACH SECTION	LENGTH	TYPE	A	B	C
4BI	4 (13)	6	4'-7" (1400)	I	5" (125)	26" (660)	2" (50)
4B2	4 (13)	**	4'-7" (1400)	I	5" (125)	26" (660)	2" (50)
6BI	6 (19)	I	*	STR.			
6B2	6 (19)	2	*	STR.			

* THE LENGTH OF BARS 6BI AND 6B2 SHALL BE 11" (280) SHORTER IN LENGTH THAN THE NOMINAL SIZE OF THE BARRIER IN WHICH IT IS USED.

** SEE "BAR OFFSETS" CHART ON THIS SHEET FOR MORE INFORMATION.

TYPICAL PRE-CAST REINFORCEMENT DETAILS

NOTES: 1). CONCRETE CLEAR COVER FOR REINFORCING BARS SHALL BE 1½" (40) MIN..

DELAWARE
DEPARTMENT OF TRANSPORTATION

32" (960) CONCRETE SAFETY BARRIER (F SHAPE)

STANDARD NO. B-14 (2009) | SHT. 2 OF 4

APPROVED SIGNATURE ON FILE (CHIEF ENGINEER) 01/19/2010 (DATE)

RECOMMENDED SIGNATURE ON FILE (DESIGN ENGINEER) 01/14/2010 (DATE)

09/18/2009

SCALE : N.T.S.

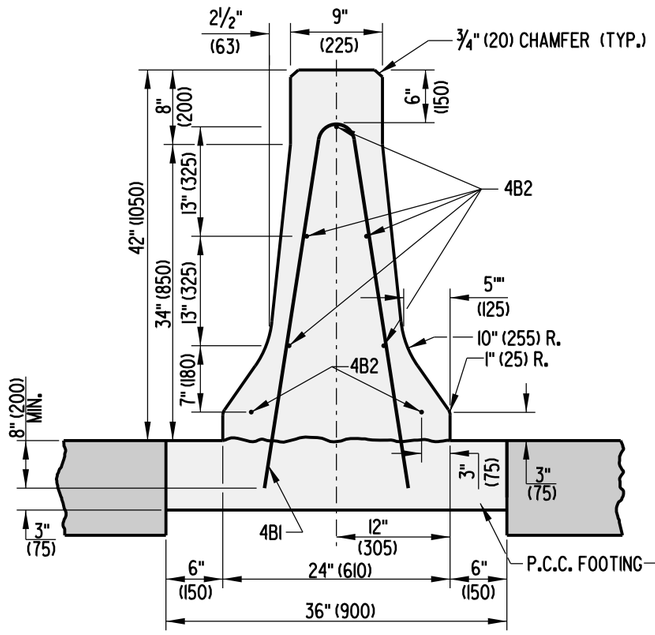

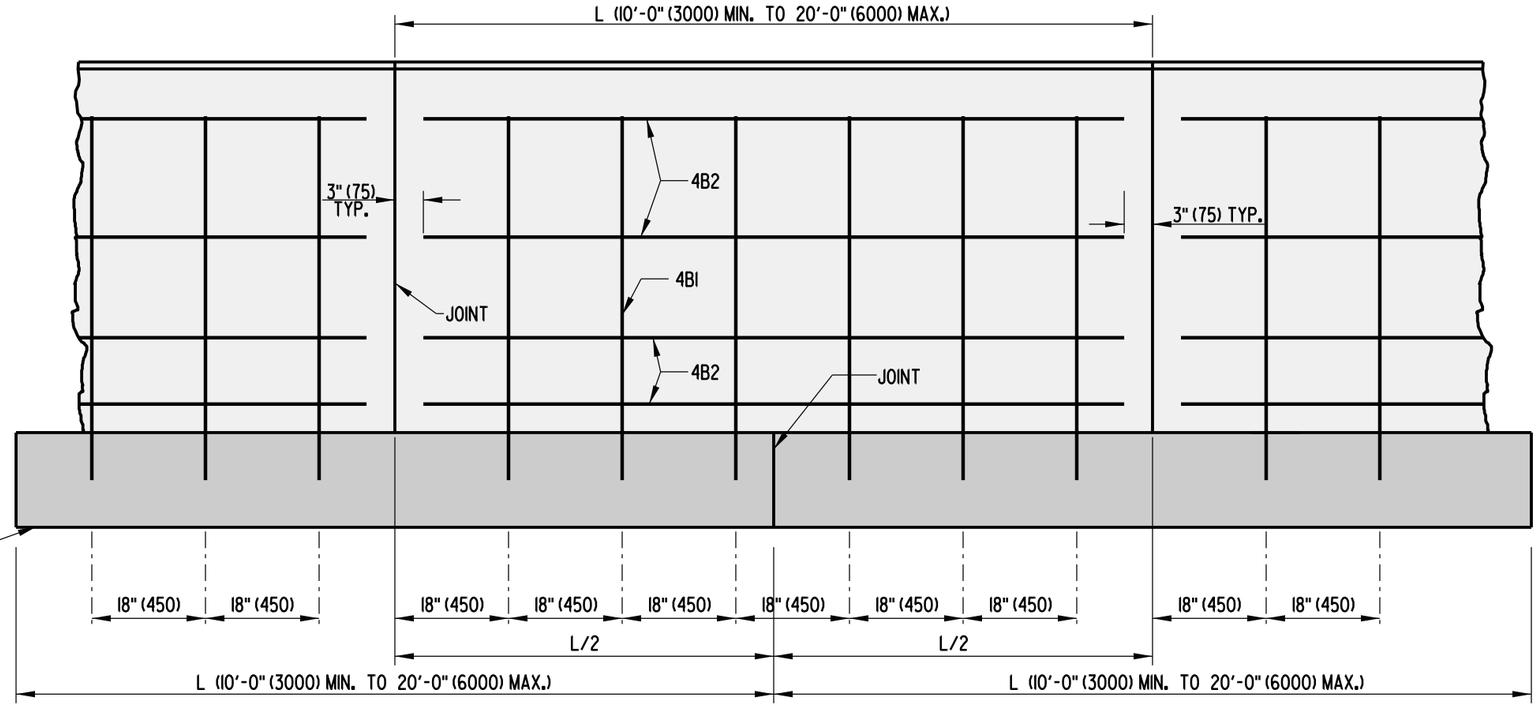

SECTION

ELEVATION

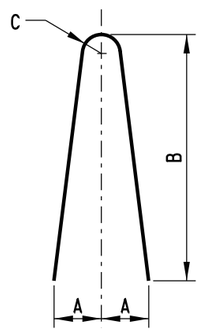

TYPE 'I' BAR

BAR OFFSETS	
NOMINAL LENGTH OF BARRIER SECTION (L)	NO. REQ'D FOR EACH BARRIER SECTION
20' (6000)	13
18' (5500)	12
16' (5000)	10
14' (4500)	9
12' (4000)	8
10' (3000)	6

BAR LIST							
MARK	SIZE	NUMBER IN EACH SECTION	LENGTH	TYPE	A	B	C
4BI	4 (13)	**	7'-6" (2286)	I	6" (150)	44" (1118)	2" (50)
4B2	4 (13)	7	*	STR.	N/A	N/A	N/A

* THE LENGTH OF BAR 4B2 SHALL BE 6" (150) SHORTER IN LENGTH THAN THE NOMINAL SIZE OF THE BARRIER IN WHICH IT IS USED.

** SEE "BAR OFFSETS" CHART ON THIS SHEET FOR MORE INFORMATION.

TYPICAL CAST-IN-PLACE OR SLIP-FORM CONSTRUCTION

NOTES: 1). CONCRETE CLEAR COVER FOR REINFORCING BARS SHALL BE 1½" (40) MIN.
2). BARS SHALL BE CUT AT EVERY JOINT IF MADE USING CONTINUOUS SLIP-FORM CONSTRUCTION.

DELAWARE
DEPARTMENT OF TRANSPORTATION

42" (1050) CONCRETE BARRIER DETAILS (F-SHAPE)

STANDARD NO. B-14 (2009) | SHT. 3 OF 4

APPROVED SIGNATURE ON FILE (CHIEF ENGINEER) 01/19/2010 (DATE)

RECOMMENDED SIGNATURE ON FILE (DESIGN ENGINEER) 01/14/2010 (DATE)

12/21/2009

SCALE : N.T.S.

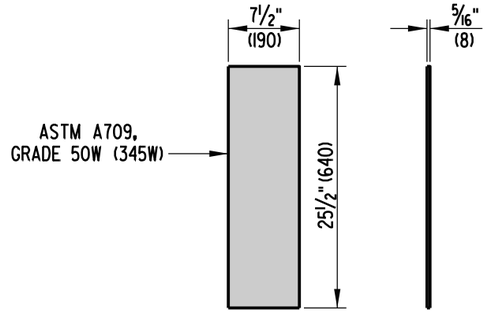

STEEL CONNECTOR PLATE

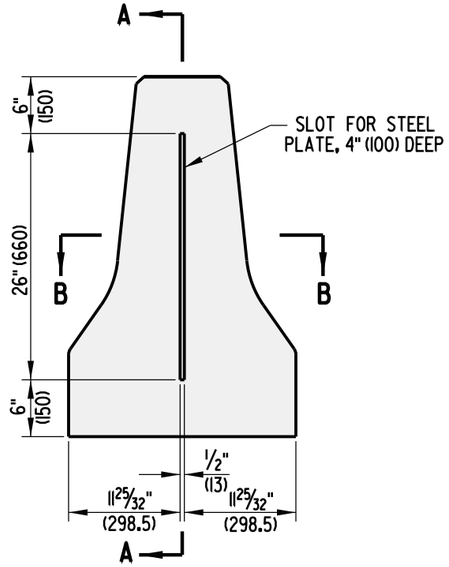

SLOT DIMENSIONS

CONCRETE SAFETY BARRIER, PRECAST CONSTRUCTION
'F' SHAPE BARRIER SECTION

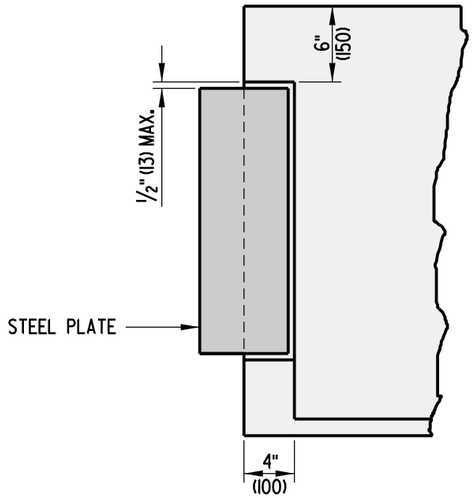

SECTION A-A

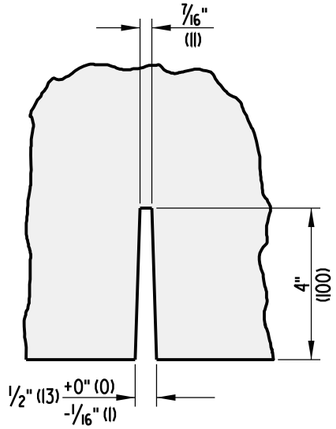

SECTION B-B

DELAWARE DEPARTMENT OF TRANSPORTATION	SLOTTED PLATE CONNECTION DETAILS		APPROVED SIGNATURE ON FILE (CHIEF ENGINEER) 01/19/2010 (DATE)
	STANDARD NO. B-14 (2009)	SHT. 4 OF 4	RECOMMENDED SIGNATURE ON FILE (DESIGN ENGINEER) 01/14/2010 (DATE)

09/18/2009

SCALE : N.T.S.

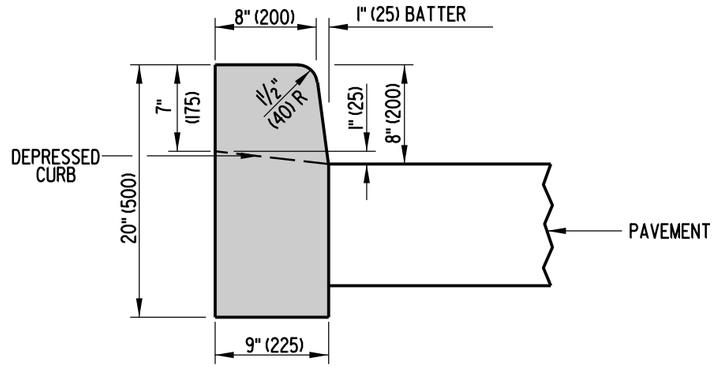

P.C.C. CURB
TYPE 1

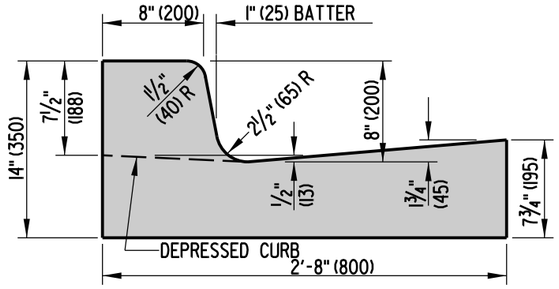

INTEGRAL P.C.C. CURB AND GUTTER
TYPE 1

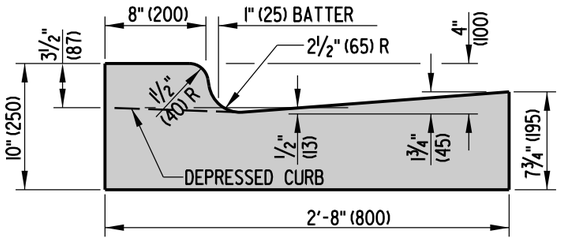

INTEGRAL P.C.C. CURB AND GUTTER
TYPE 4

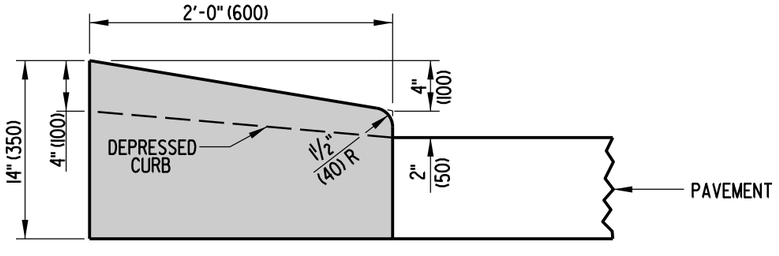

P.C.C. CURB
TYPE 2

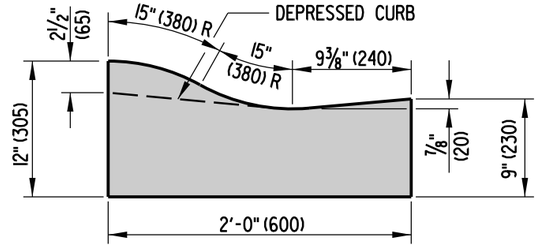

INTEGRAL P.C.C. CURB AND GUTTER
TYPE 2

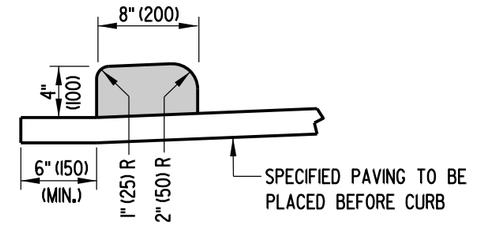

HOT-MIX, HOT LAID BITUMINOUS CONCRETE CURB

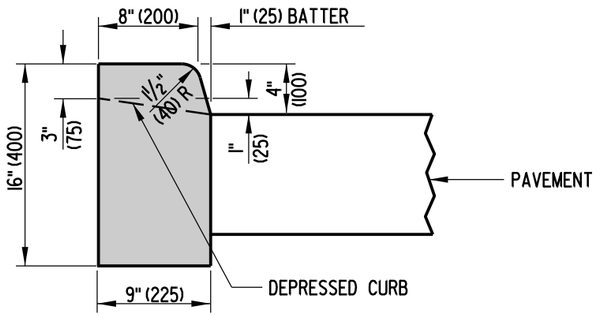

P.C.C. CURB
TYPE 3

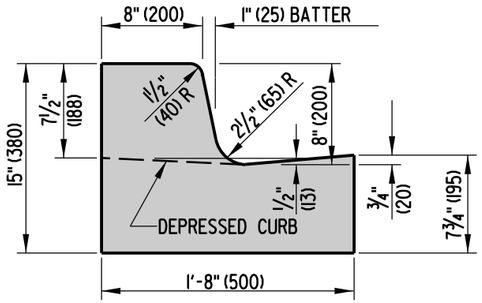

INTEGRAL P.C.C. CURB AND GUTTER
TYPE 3

NOTES:

1. WHEN P.C.C. CURB OR INTEGRAL P.C.C. CURB AND GUTTER IS PLACED ADJACENT TO PORTLAND CEMENT CONCRETE PAVEMENT, CONSTRUCT THE JOINT AS PER THE LONGITUDINAL JOINT SEALANT DETAIL ON DETAIL P-2, SHEET 3 OF 5. USE APPROVED JOINT FILLER TO SEAL. WORK TO BE PAID UNDER RESPECTIVE CURB AND GUTTER ITEM.
2. DEPRESS CURB AT ENTRANCES AND CURB RAMPS AS DETAILED ON THIS SHEET.
3. DEPRESS CURB FLUSH WITH PAVEMENT AT CURB RAMPS. MAXIMUM SLOPE OF CURB AT CURB RAMPS IS 20:1 IN THE DIRECTION OF PEDESTRIAN TRAVEL. SEE DETAIL C-2, SHEET 1 OF 4.
4. DEPRESS CURB FLUSH WITH PAVEMENT OR ADJACENT AREA AT NOSE OF ISLANDS, TAPERING BACK TO FULL HEIGHT AT A SLOPE OF 12:1.

DELAWARE DEPARTMENT OF TRANSPORTATION	P.C.C. CURB, P.C.C. CURB & GUTTER, AND HOT-MIX CURB	APPROVED SIGNATURE ON FILE (CHIEF ENGINEER) 01/19/2010 (DATE)
	STANDARD NO. C-1 (2009) SHT. 1 OF 1	RECOMMENDED SIGNATURE ON FILE (DESIGN ENGINEER) 01/14/2010 (DATE)

01/12/2009

SCALE : N.T.S.

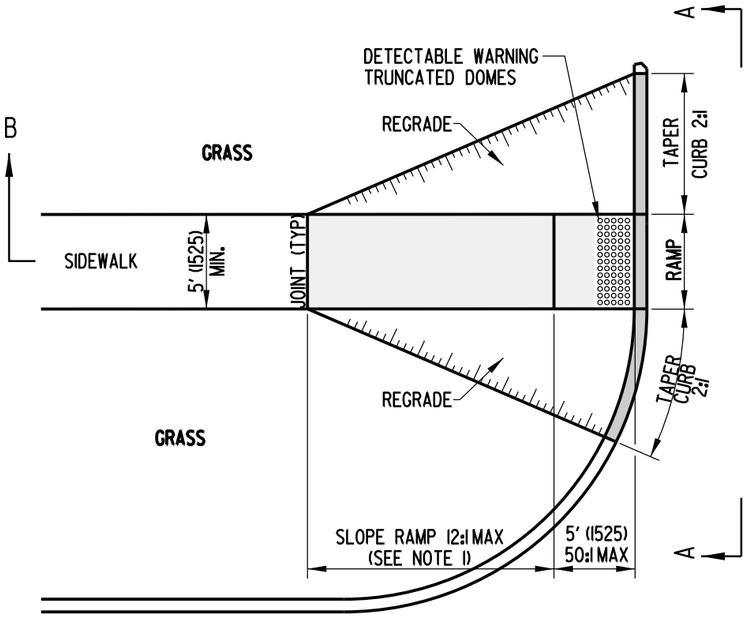

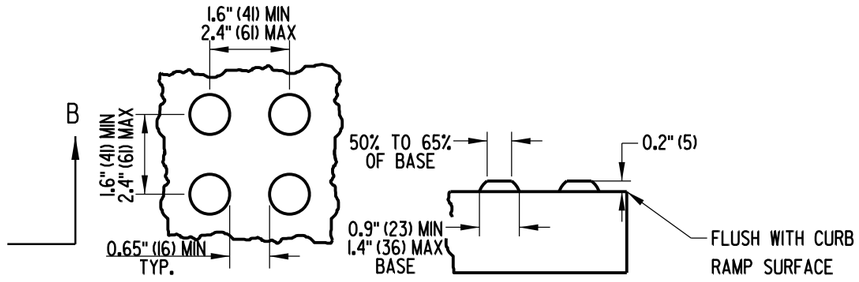

DETECTABLE WARNING TRUNCATED DOME DETAILS

NOTES:
A). THE AREA OF DETECTABLE WARNING TRUNCATED DOMES SHALL BE 24" (600) LONG AND THE FULL WIDTH OF THE RAMP OR DEPRESSED CURB.
B). SEE SPECIFICATION FOR ADDITIONAL INFORMATION.

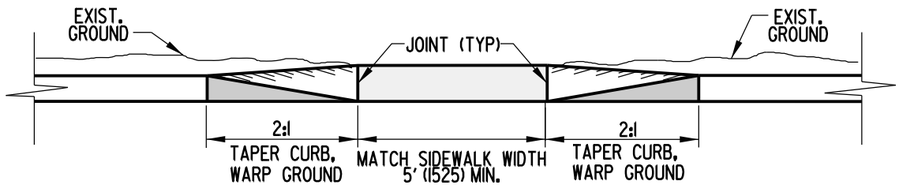

ELEVATION A-A

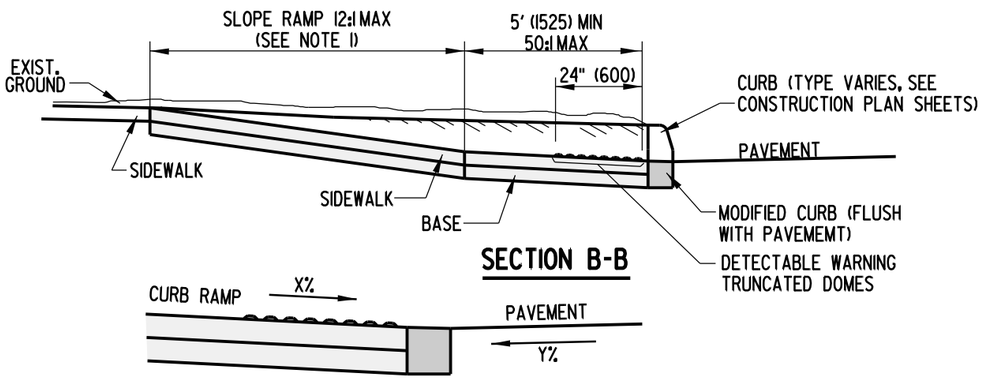

SECTION B-B

MAXIMUM DIFFERENCE IN GRADE

FOR EXAMPLE, IF THE CURB RAMP AND DEPRESSED CURB SLOPE (X) IS 8.1% AND THE PAVEMENT SLOPE (Y) IS 4.0%, THEN TO DETERMINE THE DIFFERENCE IN GRADE, ADD X + Y TO GET 12.1%. WHICH IS GREATER THAN THE 11% PREFERRED BUT LESS THAN THE 13% MAXIMUM.

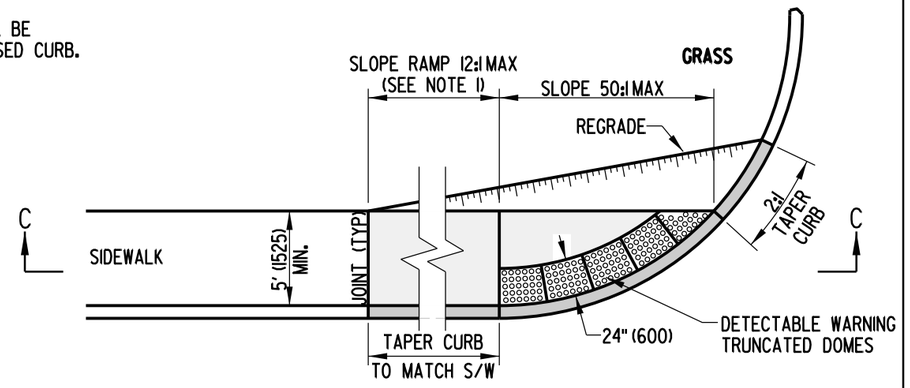

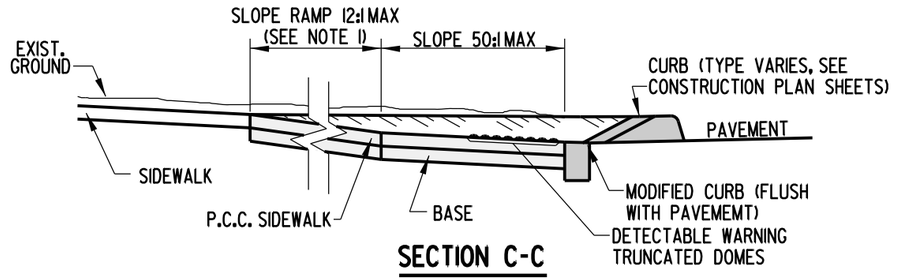

SECTION C-C

NOTES:
1). WHERE A 12:1 MAXIMUM SLOPE RAMP WILL NOT MEET THE SIDEWALK GRADE WITHIN A LENGTH OF 15' (4570) DUE TO STEEP ADJACENT ROADWAY, THE RAMP LENGTH MAY BE LIMITED TO 15' (4570), AND ALLOWED TO EXCEED 12:1.
2). RAMP AND SIDEWALK CROSS SLOPE SHALL BE 50:1 (2%) MAXIMUM.
3). IF GRADING WILL BE STEEPER THAN 6:1, THEN A TYPE I CURB OR RETAINING WALL SHOULD BE USED TO ELIMINATE THE NEED FOR THE STEEP SLOPE.
4). THE MAXIMUM DIFFERENCE IN GRADE BETWEEN THE CURB RAMP OR MODIFIED CURB AND THE PAVEMENT SHALL BE 13%, HOWEVER 11% IS PREFERRED.

CURB RAMP, TYPE 1

PERPENDICULAR CURB RAMP

DELAWARE
DEPARTMENT OF TRANSPORTATION

CURB RAMP, TYPE 1 AND SECTIONS

STANDARD NO. C-2 (2008) | SHT. 1 OF 4

APPROVED _____ CHIEF ENGINEER 11/18/08 DATE

RECOMMENDED Dennis M. O'Shea DESIGN ENGINEER 11/17/08 DATE

10/16/2008

SCALE : N.T.S.

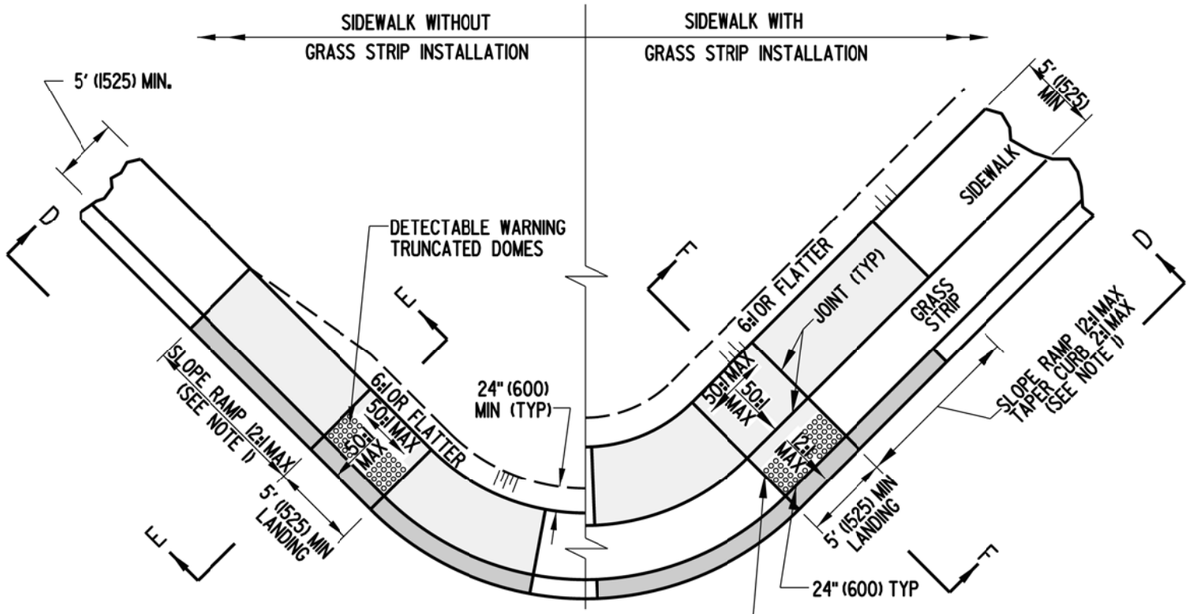

CURB RAMP, TYPE 2

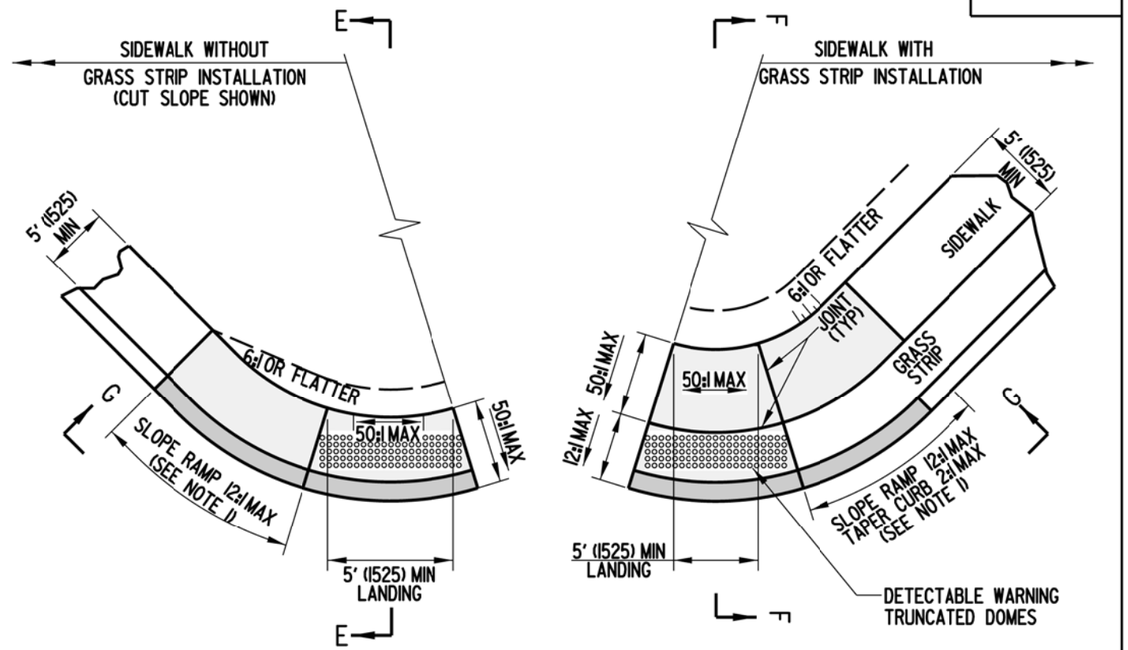

CURB RAMP, TYPE 3
DIAGONAL CURB RAMP

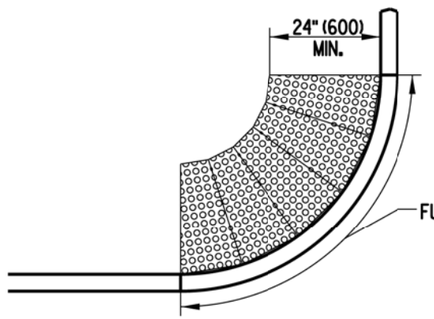

SAMPLE LAYOUT OF DETECTABLE WARNING TRUNCATED DOMES ALONG A CURB RADIUS
DETECTABLE WARNININGS SHALL BE PLACED
THE FULL WIDTH OF THE DEPRESSED CURB.

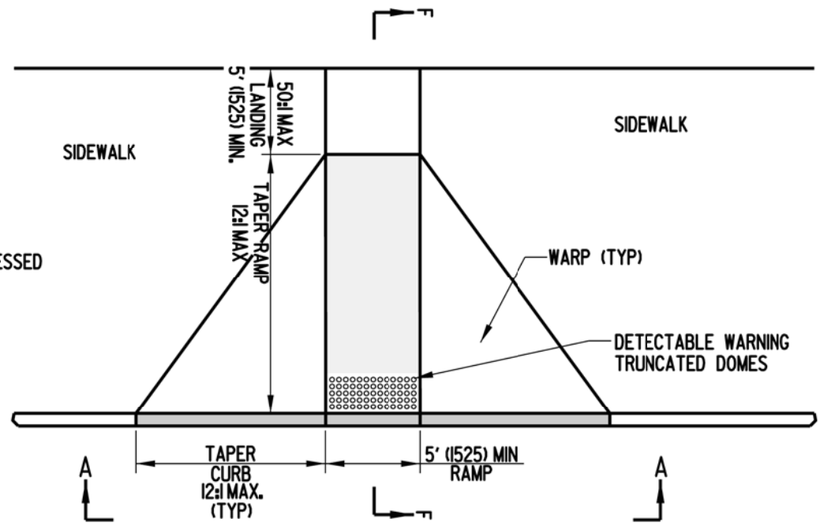

CURB RAMP, TYPE 4
PERPENDICULAR CURB RAMP

NOTES:

1). WHERE A 12:1 MAXIMUM SLOPE RAMP WILL NOT MEET THE SIDEWALK GRADE WITHIN A LENGTH OF 15' (4570) DUE TO STEEP ADJACENT ROADWAY, THE RAMP LENGTH MAY BE LIMITED TO 15' (4570), AND THE RAMP SLOPE ALLOWED TO EXCEED 12:1.
2). TRANSITION TO EXISTING SIDEWALK WIDTH OVER THE LENGTH OF THE RAMP.
3). RAMP AND SIDEWALK CROSS SLOPE SHALL BE 50:1 (2%) MAXIMUM.
4). IF GRADING WILL BE STEEPER THAN 6:1 ADJACENT TO THE CURB RAMP OR SIDEWALK, THEN A TYPE I CURB OR RETAINING WALL SHOULD BE USED TO ELIMINATE THE NEED FOR THE STEEP SLOPE.
5). FOR THE CURB RAMP, TYPE 3, IF THE WIDTH OF THE FULLY DEPRESSED CURB AT THE STREET IS MORE THAN 5' (1525), THE THE DETECTABLE WARNING TRUNCATED DOMES SHALL FOLLOW THE RADIUS OF THE CURB CONTINUOUSLY WITHOUT GAPS FOR THE ENTIRE LENGTH OF DEPRESSED CURB.
6). THE MAXIMUM DIFFERENCE IN GRADE BETWEEN THE SIDEWALK OR CURB AND THE PAVEMENT SHALL BE 13%, HOWEVER 11% IS PREFERRED. SEE STANDARD NO. C-2, SHEET 1 OF 4.
7). IF THE WIDTH OF THE FULLY DEPRESSED CURVED CURB AT THE STREET IS 5' (1525) OR LESS, THEN A RECTANGULAR PIECE OF DETECTABLE WARNING TRUNCATED DOMES MAY BE USED.

DELAWARE **DEPARTMENT OF TRANSPORTATION**	**CURB RAMPS, TYPES 2, 3, & 4**	**APPROVED** CHIEF ENGINEER 11/18/08 DATE
	STANDARD NO. C-2 (2008) SHT. 2 OF 4	**RECOMMENDED** DESIGN ENGINEER 11/17/08 DATE

11/16/2008

SCALE : N.T.S.

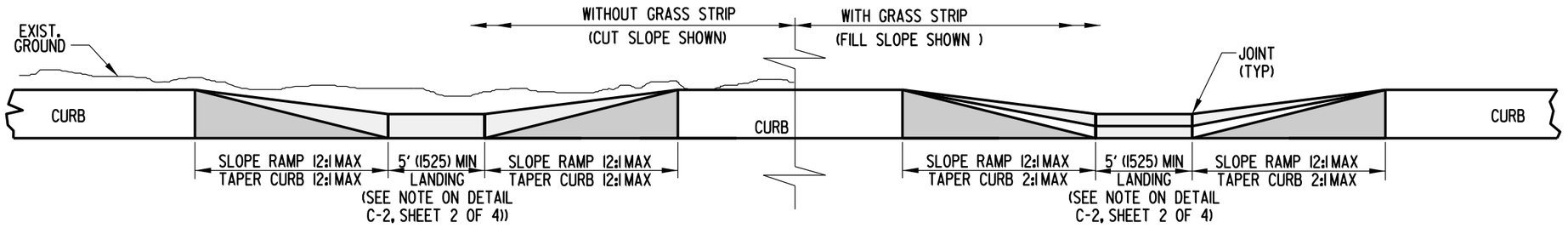

ELEVATION D-D

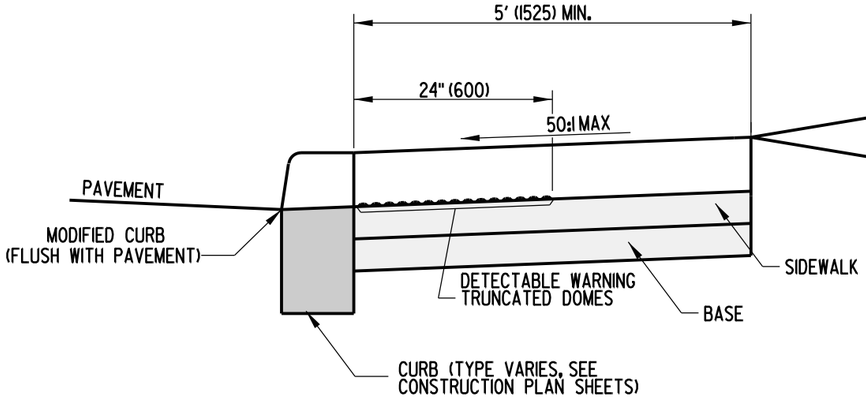

SECTION E-E

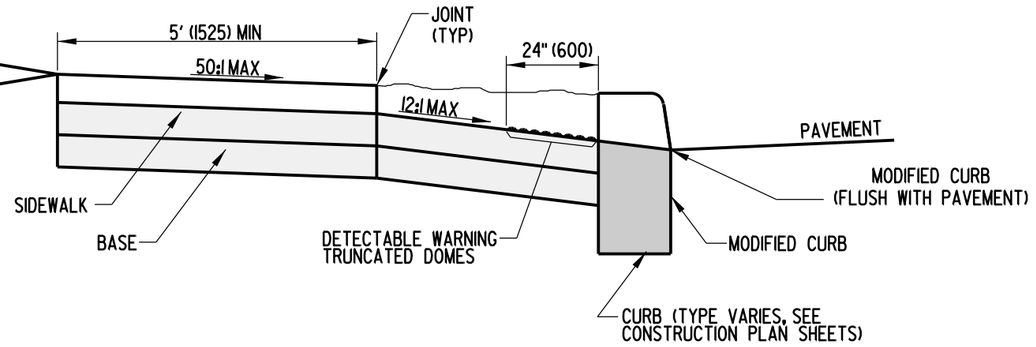

SECTION F-F

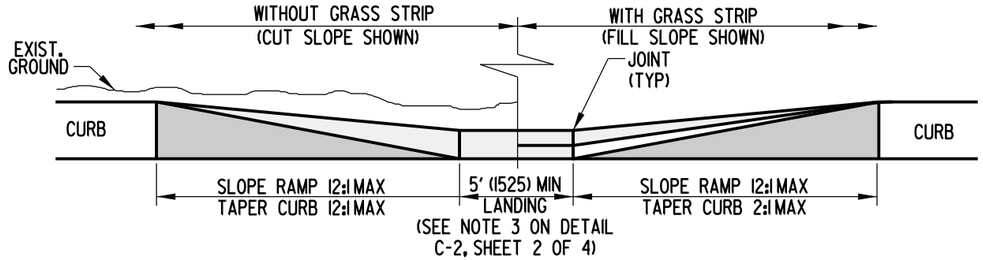

ELEVATION G-G

DELAWARE DEPARTMENT OF TRANSPORTATION	CURB RAMP SECTIONS FOR TYPES 2 & 3		APPROVED _____ CHIEF ENGINEER DATE 11/18/08
	STANDARD NO. C-2 (2008)	SHT. 3 OF 4	RECOMMENDED _____ DESIGN ENGINEER DATE 11/17/08

08/10/2004

SCALE : N.T.S.

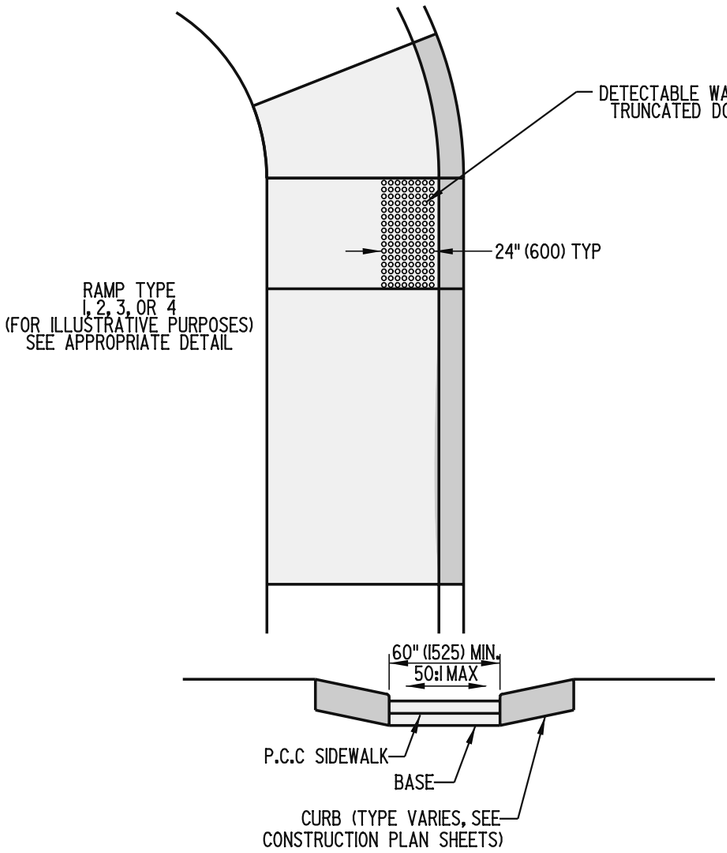

SECTION H-H

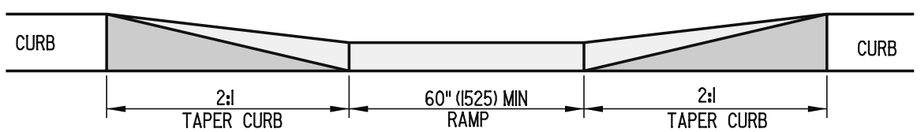

ELEVATION I-I

NOTES:

1). A CUT-THROUGH LEVEL WITH THE STREET IS THE PREFERRED TREATMENT FOR ISLANDS, ALTHOUGH, RAMPS CAN BE USED WHERE THE ISLAND WIDTH IS SUFFICIENT TO ACCOMMODATE THEM. POSITIVE SURFACE DRAINAGE MUST BE PROVIDED FOR EITHER TREATMENT. EITHER TREATMENT IS ACCEPTABLE.
2). WHERE A 12:1 MAXIMUM SLOPE RAMP WILL NOT MEET THE SIDEWALK GRADE WITHIN A LENGTH OF 15' (4570) DUE TO STEEP ADJACENT ROADWAY, THE RAMP LENGTH MAY BE LIMITED TO 15' (4570), AND THE RAMP SLOPE ALLOWED TO EXCEED 12:1.
3). A CONTINUOUS PATH MUST BE PROVIDED BETWEEN ADJACENT CURB RAMPS IN ISLANDS AND MEDIANS, WITH A MAXIMUM RUNNING SLOPE OF 20:1.
4). RAMP AND SIDEWALK CROSS SLOPE SHALL BE 50:1 (2%) MAXIMUM.
5). WHERE THERE IS NO DEPRESSED CURB AT A CUT-THROUGH OR CURB RAMP, THE DETECTABLE WARNING SHALL BE INSTALLED 3" (75) FROM THE ROADWAY PAVEMENT.
6). IF THE MINIMUM CLEAR SPACE BETWEEN DETECTABLE WARNINGS IS LESS THAN 2' (600), THEN THE ENTIRE MEDIAN CURB RAMP AREA SHALL BE COVERED WITH DETECTABLE WARNINGS.
7). PEDESTRIAN SIGNALS SHALL BE ACCESSIBLE WITH A LEVEL LANDING, WHOSE EDGE IS NO MORE THAN 10" (250) FROM ALL PEDESTRIAN PUSH BUTTONS.

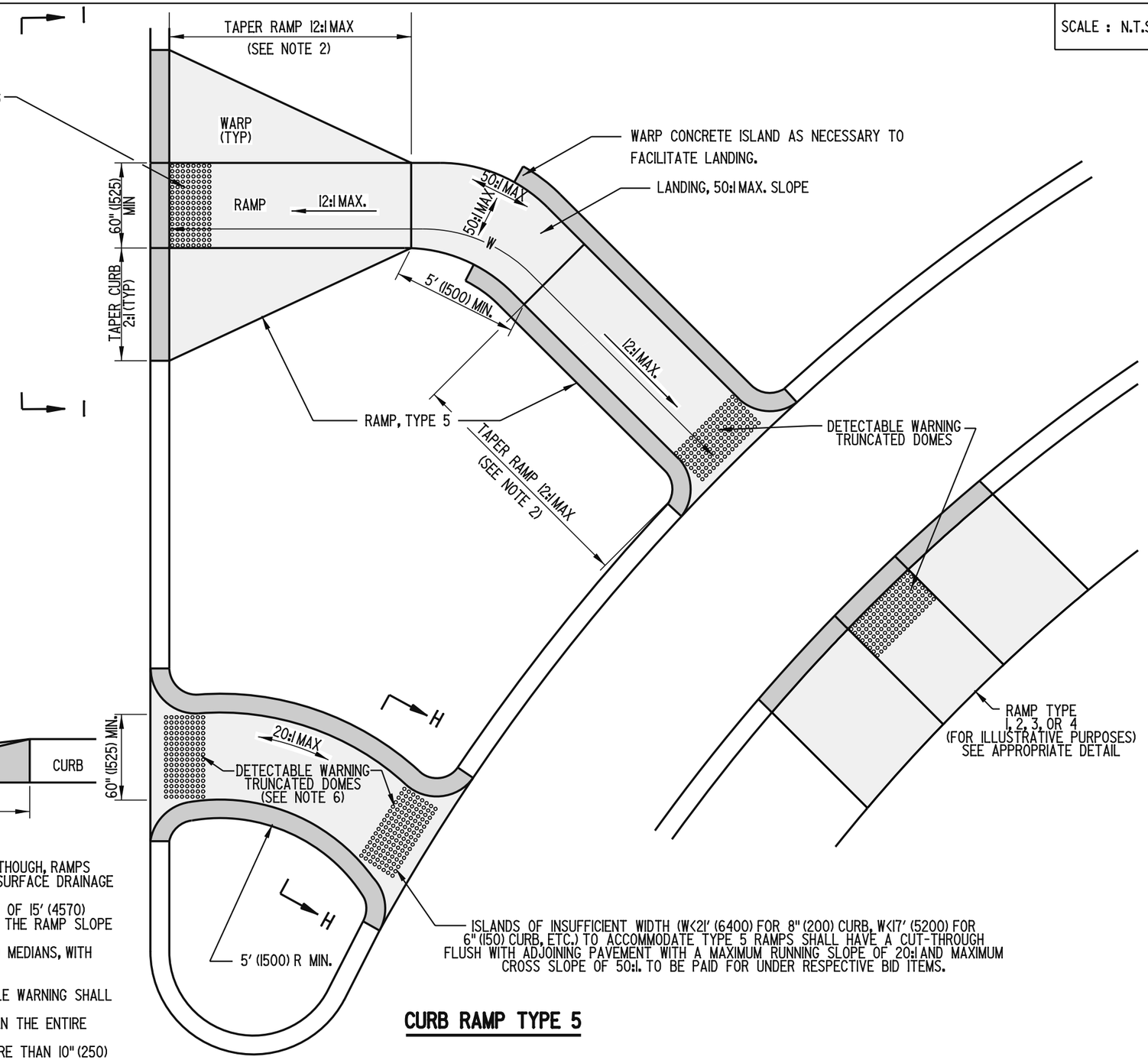

CURB RAMP TYPE 5

DELAWARE DEPARTMENT OF TRANSPORTATION	CURB RAMP TYPE 5 & SECTIONS		APPROVED _____ CHIEF ENGINEER DATE 10/10/06
	STANDARD NO. C-2 (2006)	SHT. 4 OF 4	RECOMMENDED _____ DESIGN ENGINEER DATE 10/9/06

08/03/2006

SCALE : N.T.S.

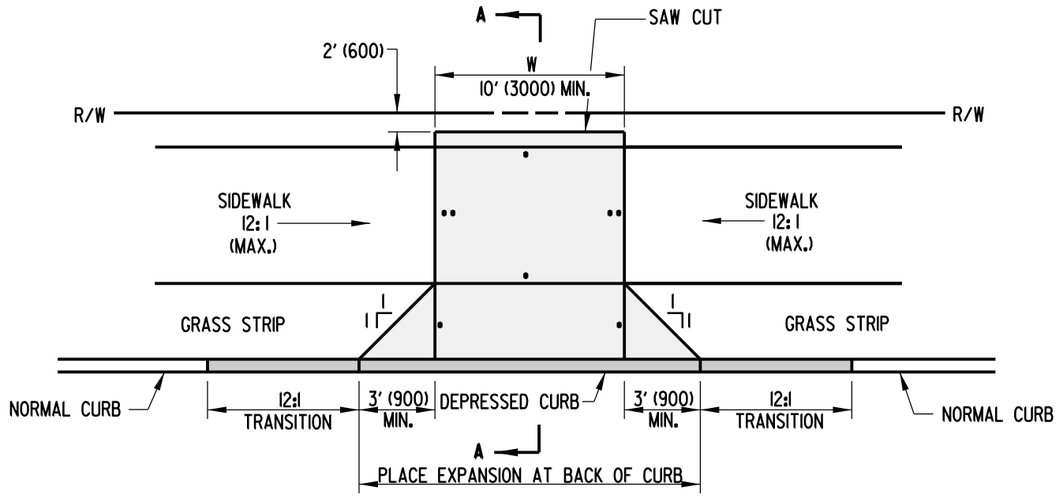

PLAN

• - JOINT
•• - EXPANSION MATERIAL

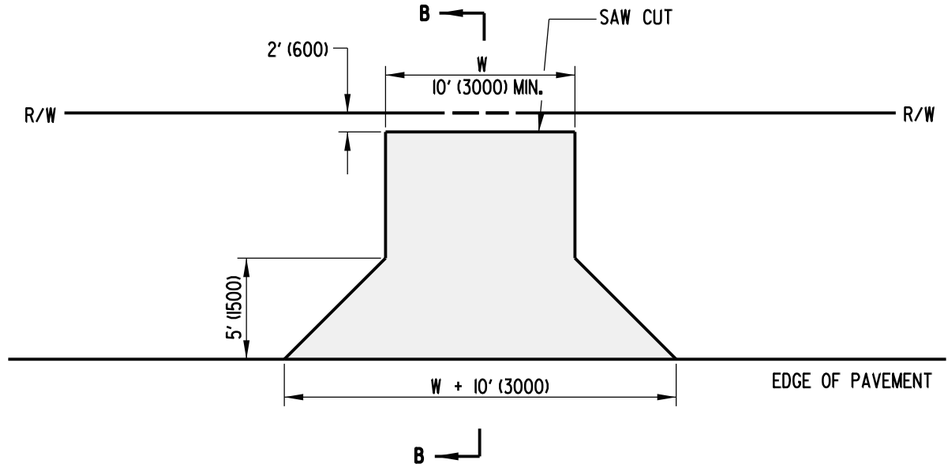

PLAN

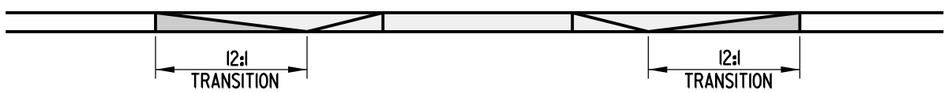

ELEVATION

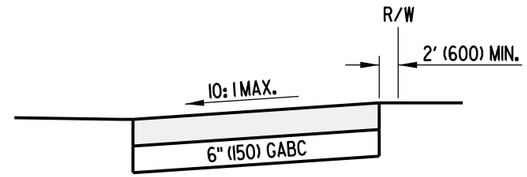

SECTION B-B

ENTRANCE WITHOUT SIDEWALK

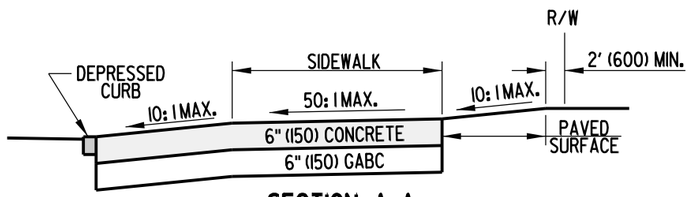

SECTION A-A

ENTRANCE WITH SIDEWALK

NOTE: IF WIDTH OF DRIVEWAY IS 16' (4870) OR GREATER, THE 1:1 FLARE CAN BE OMITTED.

DELAWARE DEPARTMENT OF TRANSPORTATION	ENTRANCES		APPROVED _____ CHIEF ENGINEER DATE 11/18/08
	STANDARD NO. C-3 (2008)	SHT. 1 OF 1	RECOMMENDED _____ DESIGN ENGINEER DATE 11/17/08

09/10/2008

SCALE : N.T.S.

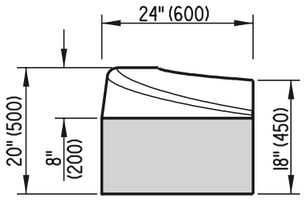

SECTION A-A

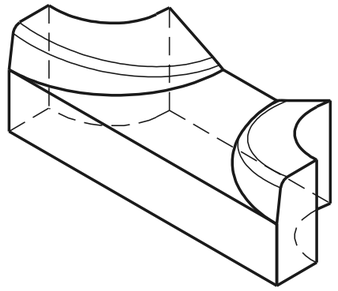

ISOMETRIC VIEW

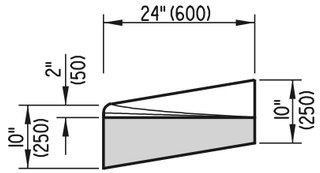

SECTION B-B

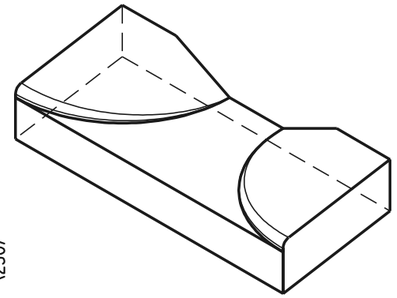

ISOMETRIC VIEW

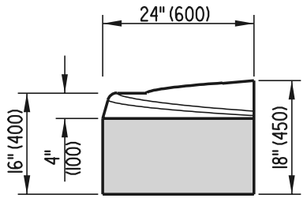

SECTION C-C

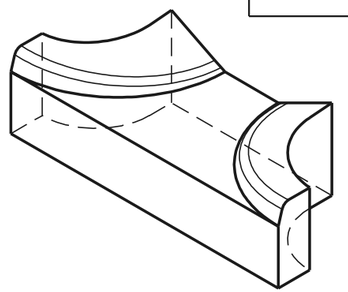

ISOMETRIC VIEW

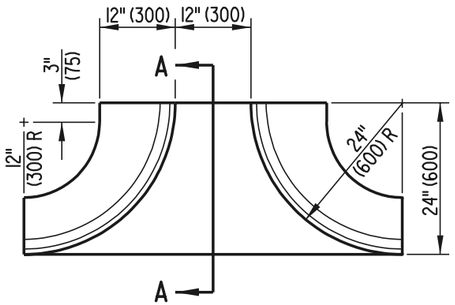

TOP VIEW

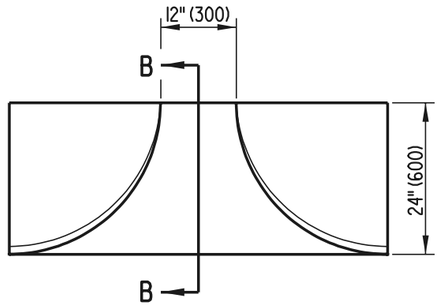

TOP VIEW

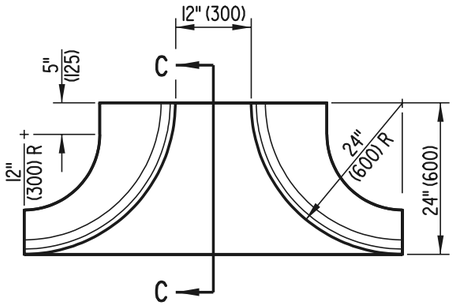

TOP VIEW

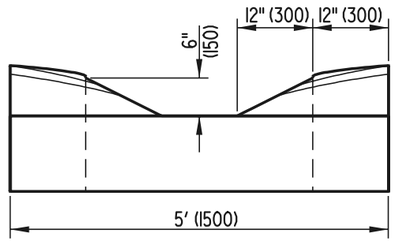

FRONT VIEW

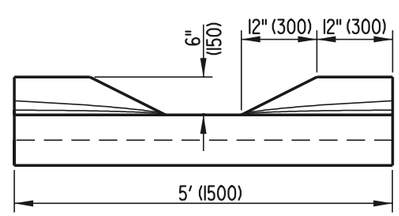

FRONT VIEW

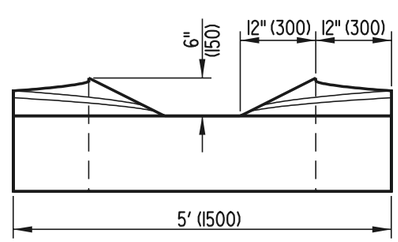

FRONT VIEW

TYPE A
P.C.C. CURB, TYPE 1

TYPE B
P.C.C. CURB, TYPE 2

TYPE C
P.C.C. CURB, TYPE 3

DELAWARE DEPARTMENT OF TRANSPORTATION	CURB OPENINGS		APPROVED [signature] CHIEF ENGINEER 6/18/01 DATE
	STANDARD NO. C-4 (2001)	SHT. 1 OF 3	RECOMMENDED [signature] DESIGN ENGINEER 6/15/01 DATE

04/17/2001

SCALE : N.T.S.

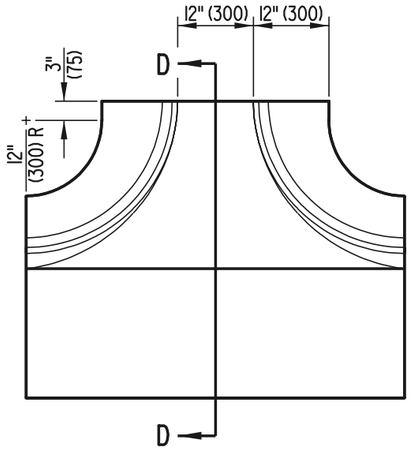

TOP VIEW

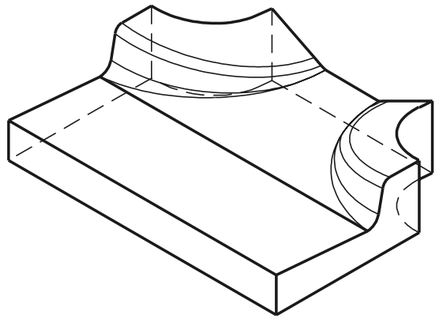

ISOMETRIC VIEW

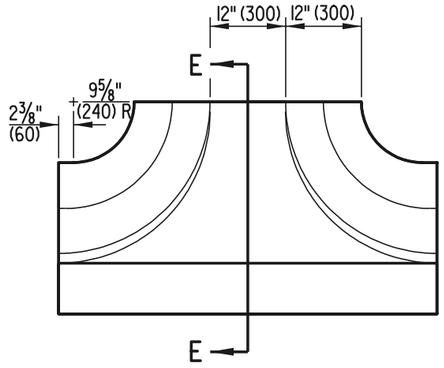

TOP VIEW

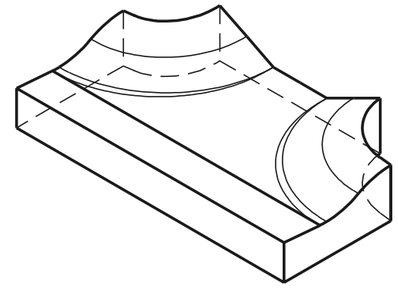

ISOMETRIC VIEW

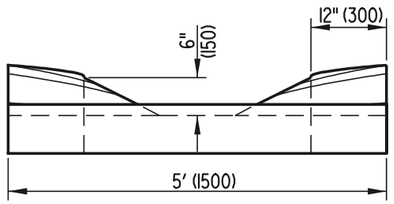

FRONT VIEW

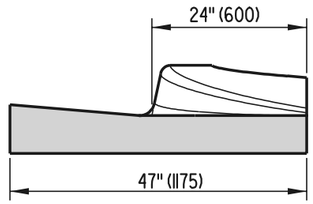

SECTION D-D

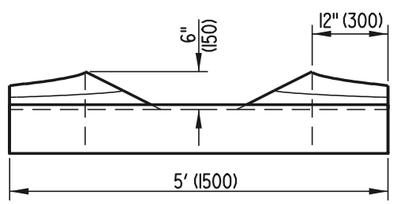

FRONT VIEW

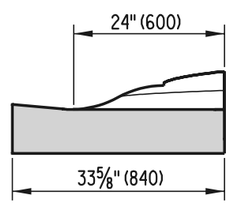

SECTION E-E

TYPE D

INTEGRAL P.C.C. CURB AND GUTTER, TYPE 1

TYPE E

INTEGRAL P.C.C. CURB AND GUTTER, TYPE 2

DELAWARE DEPARTMENT OF TRANSPORTATION	CURB OPENINGS		APPROVED [signature] CHIEF ENGINEER 6/18/01 DATE
	STANDARD NO. C-4 (2001)	SHT. 2 OF 3	RECOMMENDED [signature] DESIGN ENGINEER 6/15/01 DATE

03/09/2001

SCALE : N.T.S.

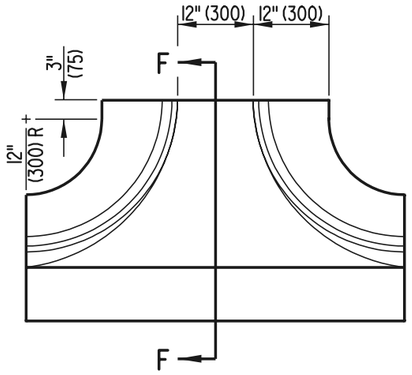

TOP VIEW

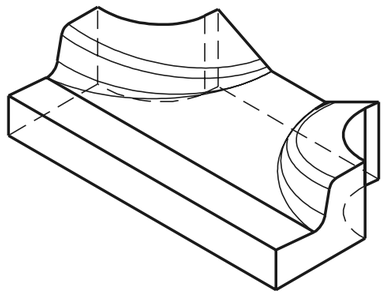

ISOMETRIC VIEW

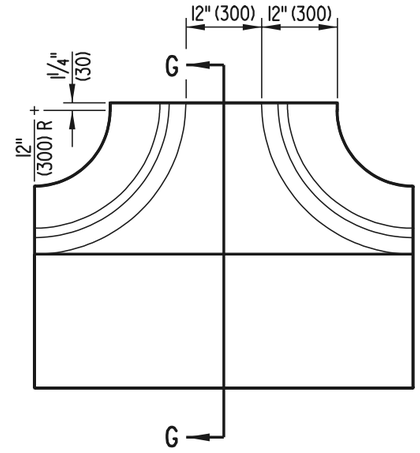

TOP VIEW

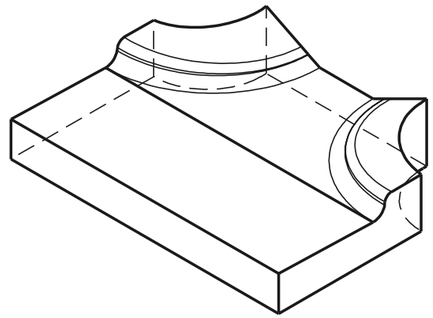

ISOMETRIC VIEW

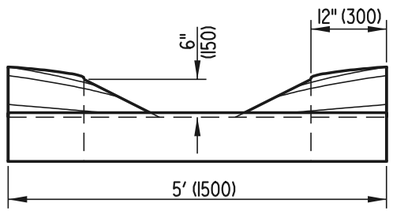

FRONT VIEW

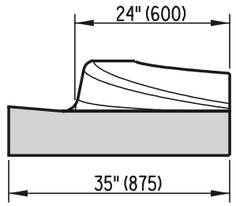

SECTION F-F

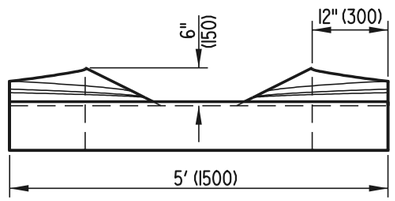

FRONT VIEW

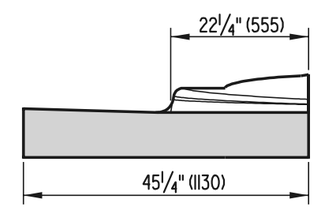

SECTION G-G

TYPE F

INTEGRAL P.C.C. CURB AND GUTTER, TYPE 3

TYPE G

INTEGRAL P.C.C. CURB AND GUTTER, TYPE 4

DELAWARE DEPARTMENT OF TRANSPORTATION	CURB OPENINGS		APPROVED [signature] CHIEF ENGINEER 6/18/01 DATE
	STANDARD NO. C-4 (2001)	SHT. 3 OF 3	RECOMMENDED [signature] DESIGN ENGINEER 6/15/01 DATE

03/09/2001

SCALE : N.T.S.

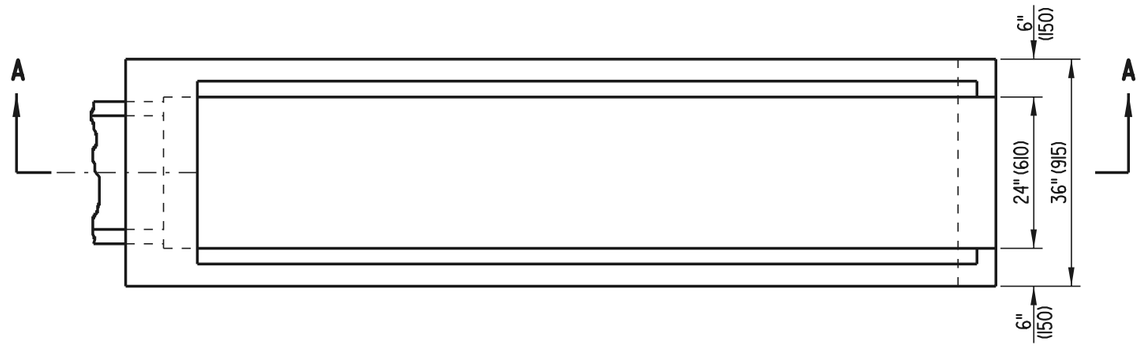

PLAN VIEW
SHOWN WITHOUT GRATE

NOTE: 6:1 SAFETY END STRUCTURE TO BE PRECAST

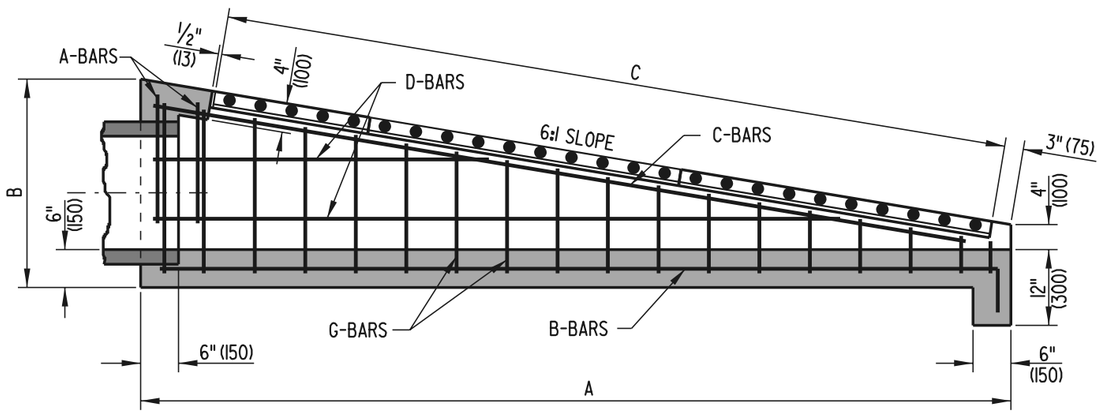

SECTION A-A

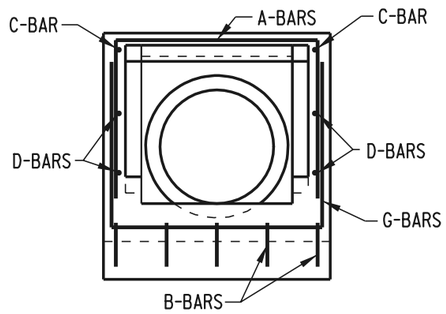

FRONT VIEW

DELAWARE DEPARTMENT OF TRANSPORTATION	6:1 SAFETY END STRUCTURE		APPROVED [signature] CHIEF ENGINEER 6/18/01 DATE
	STANDARD NO. D-1 (2001)	SHT. 1 OF 2	RECOMMENDED [signature] DESIGN ENGINEER 6/15/01 DATE

04/17/2001

SCALE : N.T.S.

DIMENSIONS

PIPE SIZE	A	B	C
15" (375)	9'-6" (2895)	2'-5" (735)	8'-4" (2540)
18" (450)	11'-6" (3505)	2'-9" (840)	10'-5" (3175)
21" (525) OR 24" (600)	14'-4" (4370)	3'-2⅝" (980)	12'-6" (3810)

BENDING DIAGRAM

PIPE SIZE	X
15" (375)	9'-2" (2795)
18" (450)	11'-2" (3405)
21" (525) OR 24" (610)	14'-0" (4265)

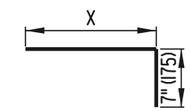

B-BARS

PIPE SIZE	Y
15" (375)	VARIES 25" (635) TO 4" (100)
18" (450)	VARIES 29" (735) TO 4" (100)
21" (525) OR 24" (610)	VARIES 34" (865) TO 4" (100)

G-BARS

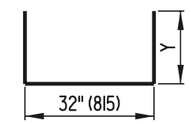

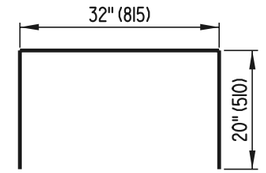

A-BARS

APPROXIMATE QUANTITIES

PIPE SIZE	CONCRETE FT³ (m³)		REINF. STEEL LBS. (kg)	NO. OF GRATES	LENGTH TO BE CUT FROM 1 GRATE	WEIGHT OF FULL SIZE GRATE LBS. (kg)	WEIGHT OF CUT GRATE LBS. (kg)
	CONC. PIPE	C.M. PIPE					
15" (375)	25 (0.708)	25.43 (0.720)	121.12 (54.94)	2	--	270.92 (122.89)	--
18" (450)	31.5 (0.892)	32.07 (0.908)	156.7 (71.08)	3	2'-1" (635)	270.92 (122.89)	135.47 (61.45)
21" (525) OR 24" (600)	40.75 (1.154)	39.87 (1.129)	194.0 (88.00)	3	--	270.92 (122.89)	--

SCHEDULE OF REINFORCING STEEL

PIPE SIZE	A-BARS				B-BARS				C-BARS				D-BARS				G-BARS			
	SIZE	NO.	SPA.	LENGTH	SIZE	NO.	SPA.	LENGTH	SIZE	NO.	SPA.	LENGTH	SIZE	NO.	SPA.	LENGTH	SIZE	NO.	SPA.	LENGTH
15" (375)	#4 (#13)	2	8" (200)	72" (1830)	#4 (#13)	5	8" (200)	9'-9" (2970)	#4 (#13)	2	-	9'-3" (2820)	#4 (#13)	4	8" (200)	VARIES 50" (1270) TO 100" (2540)	#4 (#13)	15	8" (200)	VARIES 40" (1015) TO 82" (2085)
18" (450)	#4 (#13)	2	8" (200)	72" (1830)	#4 (#13)	5	8" (200)	11'-9" (3580)	#4 (#13)	2	-	11'-5" (3480)	#4 (#13)	6	8" (200)	VARIES 43½" (1105) TO 130½" (3315)	#4 (#13)	18	8" (200)	VARIES 40" (1015) TO 90" (2285)
21" (525) OR 24" (600)	#4 (#13)	2	8" (200)	72" (1830)	#4 (#13)	5	8" (200)	14'-7" (4445)	#4 (#13)	2	-	14'-3" (4345)	#4 (#13)	6	8" (200)	VARIES 51" (1295) TO 153" (3885)	#4 (#13)	22	8" (200)	VARIES 40" (1015) TO 100" (2540)

DELAWARE
DEPARTMENT OF TRANSPORTATION

6:1 SAFETY END STRUCTURE

STANDARD NO. D-1 (2001) SHT. 2 OF 2

APPROVED [signature] CHIEF ENGINEER 6/18/01 DATE

RECOMMENDED [signature] DESIGN ENGINEER 6/15/01 DATE

04/17/2001

SCALE : N.T.S.

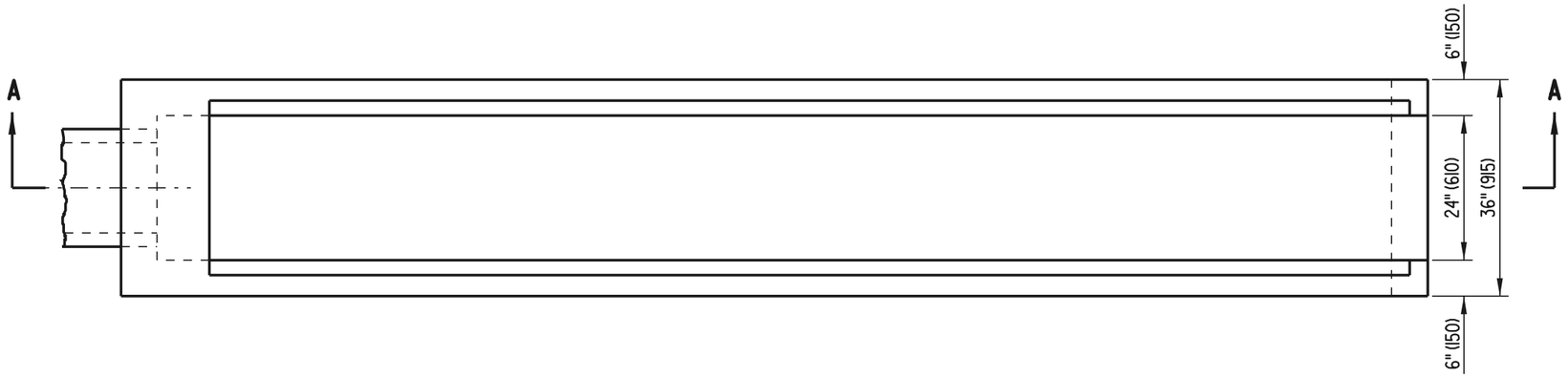

PLAN VIEW
SHOWN WITHOUT GRATE

NOTE: 10:1 SAFETY END STRUCTURE TO BE PRECAST

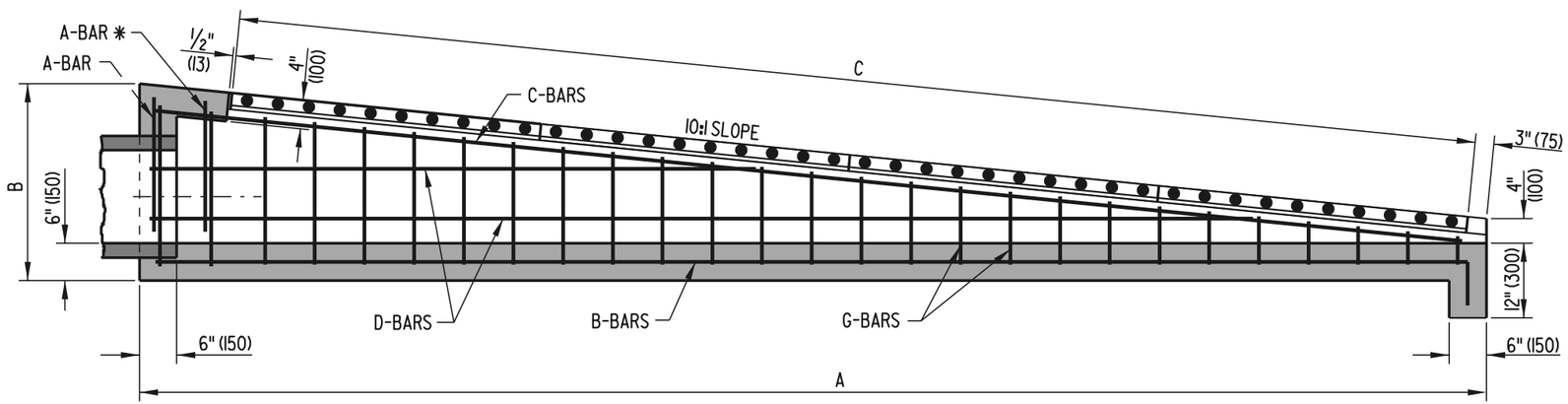

SECTION A-A

* REQUIRED ONLY FOR PIPE SIZE OF 21" (525) OR 24" (600)

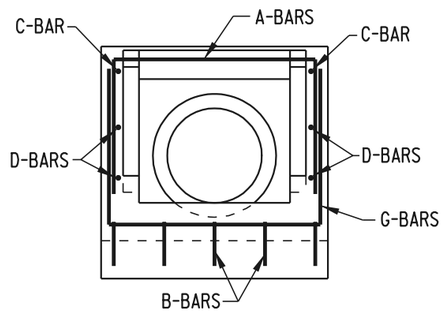

FRONT VIEW

DELAWARE DEPARTMENT OF TRANSPORTATION	10:1 SAFETY END STRUCTURE		APPROVED [signature] CHIEF ENGINEER 6/18/01 DATE
	STANDARD NO. D-2 (2001)	SHT. 1 OF 2	RECOMMENDED [signature] DESIGN ENGINEER 6/15/01 DATE

04/17/2001

SCALE : N.T.S.

DIMENSIONS

PIPE SIZE	A	B	C
15" (375)	15'-4" (4675)	2'-4 3/8" (720)	14'-7" (4445)
18" (450)	19'-6" (5945)	2'-9 3/8" (850)	18'-9" (5715)
21" (525) OR 24" (600)	24'-0" (7315)	3'-2 13/16" (985)	22'-11" (6985)

BENDING DIAGRAM

PIPE SIZE	X
15" (375)	15'-0" (4570)
18" (450)	19'-2" (5840)
21" (525) OR 24" (600)	23'-8" (7215)

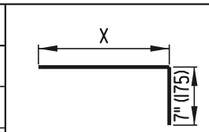

B-BARS

PIPE SIZE	Y
15" (375)	VARIES 21 1/2" (545) TO 4" (100)
18" (450)	VARIES 26 7/16" (670) TO 4" (100)
21" (525) OR 24" (600)	VARIES 31 3/4" (805) TO 4" (100)

G-BARS

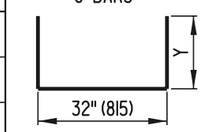

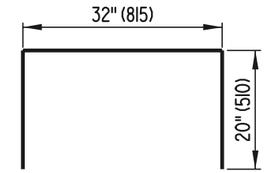

A-BARS

APPROXIMATE QUANTITIES

PIPE SIZE	CONCRETE FT³ (m³)		REINF. STEEL LBS. (kg)	NO. OF GRATES	LENGTH TO BE CUT FROM 1 GRATE	WEIGHT OF FULL SIZE GRATE LBS. (kg)	WEIGHT OF CUT GRATE LBS. (kg)
	CONC. PIPE	C.M. PIPE					
15" (375)	41.35 (1.171)	41.78 (1.183)	175.0 (79.38)	4	2'-1" (635)	270.92 (122.89)	135.47 (61.45)
18" (450)	50.11 (1.419)	50.68 (1.435)	227.0 (102.98)	5	2'-1" (635)	270.92 (122.89)	135.47 (61.45)
21" (525) OR 24" (600)	69.43 (1.966)	70.31 (1.991)	310.4 (140.79)	6	2'-1" (635)	270.92 (122.89)	135.47 (61.45)

SCHEDULE OF REINFORCING STEEL

PIPE SIZE	A-BARS				B-BARS				C-BARS				D-BARS				G-BARS			
	SIZE	NO.	SPA.	LENGTH	SIZE	NO.	SPA.	LENGTH	SIZE	NO.	SPA.	LENGTH	SIZE	NO.	SPA.	LENGTH	SIZE	NO.	SPA.	LENGTH
15" (375)	#4 (#13)	1	-	72" (1830)	#4 (#13)	5	8" (200)	15'-7" (4750)	#4 (#13)	2	-	15'-1 1/16" (4600)	#4 (#13)	4	8" (200)	VARIES 72 13/16" (1850) TO 145 5/8" (3700)	#4 (#13)	24	8" (200)	VARIES 40" (1015) TO 75 11/16" (1920)
18" (450)	#4 (#13)	1	-	72" (1830)	#4 (#13)	5	8" (200)	19'-9" (6020)	#4 (#13)	2	-	19'-3 3/8" (5875)	#4 (#13)	4	8" (200)	VARIES 89 5/8" (2275) TO 179 3/16" (4550)	#4 (#13)	30	8" (200)	VARIES 40" (1015) TO 85 3/4" (2180)
21" (525) OR 24" (600)	#4 (#13)	2	-	72" (1830)	#4 (#13)	5	8" (200)	24'-3" (7390)	#4 (#13)	2	-	23'-9 5/8" (7255)	#4 (#13)	6	8" (200)	VARIES 80 3/4" (2050) TO 242 1/8" (6150)	#4 (#13)	37	8" (200)	VARIES 40" (1015) TO 96 9/16" (2455)

DELAWARE
DEPARTMENT OF TRANSPORTATION

10:1 SAFETY END STRUCTURE

STANDARD NO. D-2 (2001) SHT. 2 OF 2

APPROVED [signature] CHIEF ENGINEER DATE 6/18/01

RECOMMENDED [signature] DESIGN ENGINEER DATE 6/15/01

04/17/2001

SCALE : N.T.S.

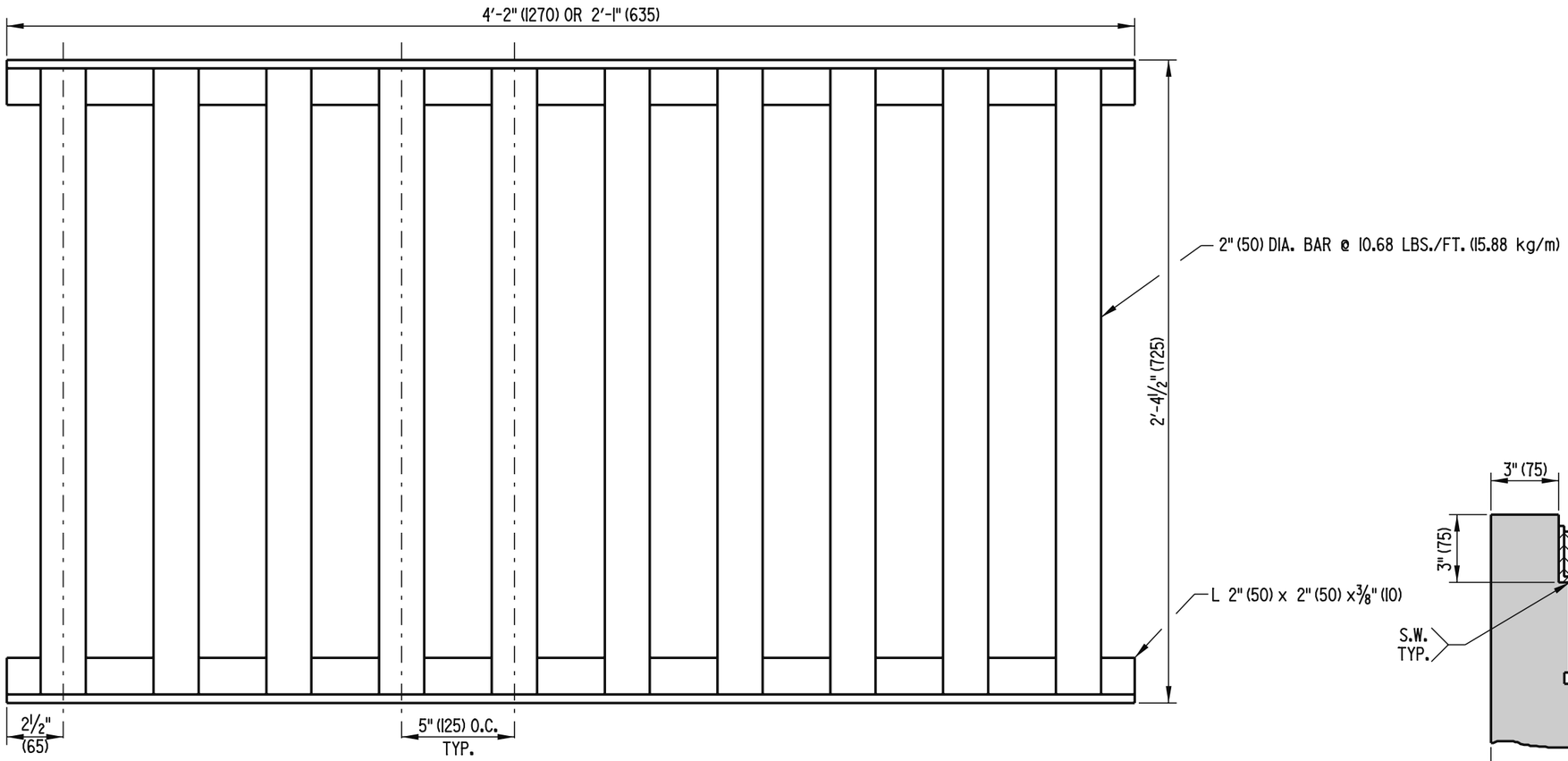

GRATE DETAIL

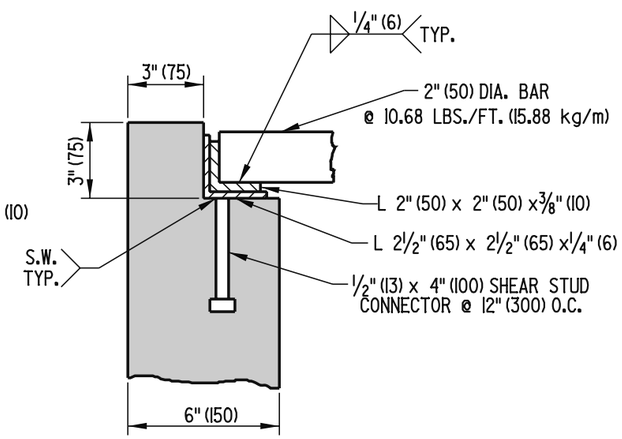

FRAME & GRATE ASSEMBLY DETAIL

DELAWARE DEPARTMENT OF TRANSPORTATION	SAFETY GRATES		APPROVED Carolann Wicks CHIEF ENGINEER 12/5/05 DATE
	STANDARD NO. D-3 (2005)	SHT. 1 OF 2	RECOMMENDED [signature] DESIGN ENGINEER 11/29/05 DATE

11/23/2005

SCALE : N.T.S.

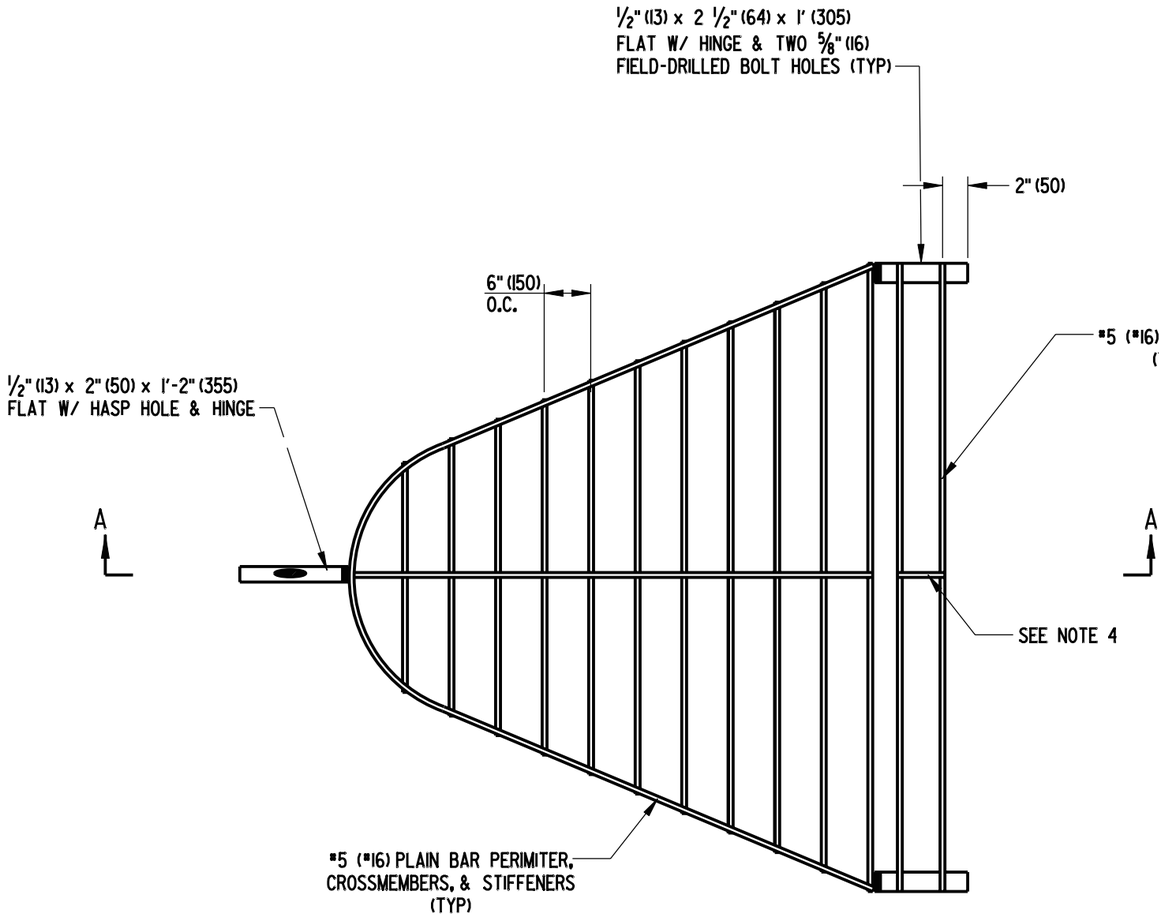

PLAN VIEW

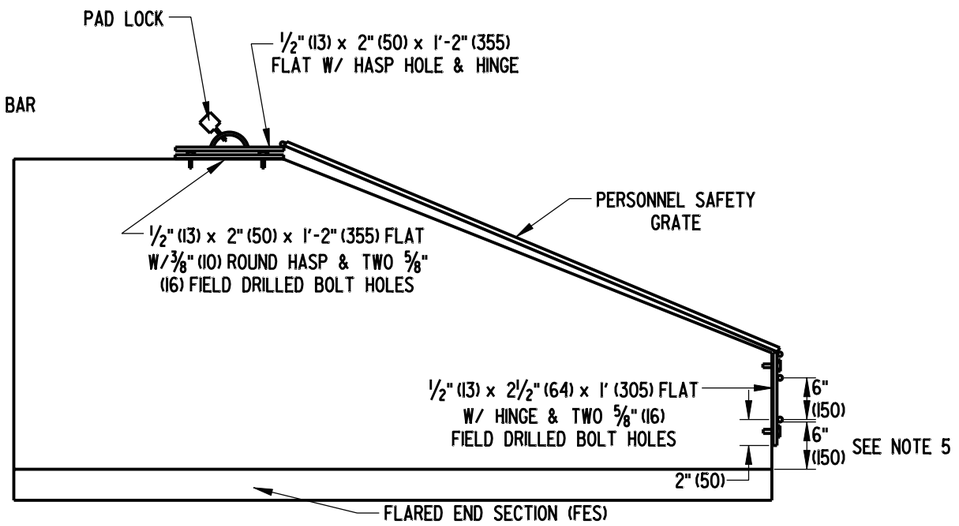

SECTION A-A

NOTES:

1). PERSONNEL SAFETY GRATES (PSG) SHALL ONLY BE INSTALLED ON THE INLETS OF STORM WATER PIPES 12" (300) OR LARGER IN DIAMETER THAT ARE NOT STRAIGHT FROM THE INLET TO THE OPEN OUTLET, REGARDLESS OF THE LENGTH.
2). THE GRATE SHALL BE MADE TO FIT THE OUTSIDE PERIMETER OF THE FLARED END SECTION (FES) ± ½" (13).
3). ALL BOLT HOLES ARE TO BE DRILLED IN THE FIELD.
4). A STIFFENER IS TO BE INSTALLED WHERE TWO OR MORE BARS ARE USED.
5). BOTTOM BAR SHALL BE 6" (150) ABOVE INVERT OF FES.
6). ALL HARDWARE ATTACHED TO CONCRETE SHALL BE ATTACHED USING APPROVED TAMPER PROOF ANCHORS.

DELAWARE DEPARTMENT OF TRANSPORTATION	SAFETY GRATES		APPROVED CHIEF ENGINEER	10/24/07 DATE
	STANDARD NO. D-3 (2007)	SHT. 2 OF 2	RECOMMENDED DESIGN ENGINEER	10/23/07 DATE

08/01/2007

SCALE : N.T.S.

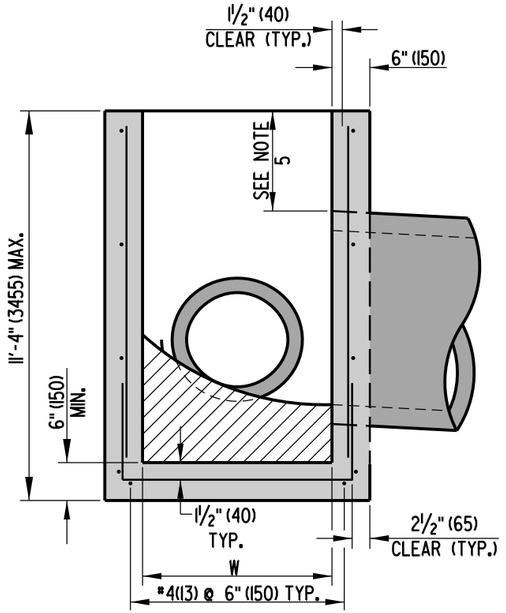

SECTION A-A

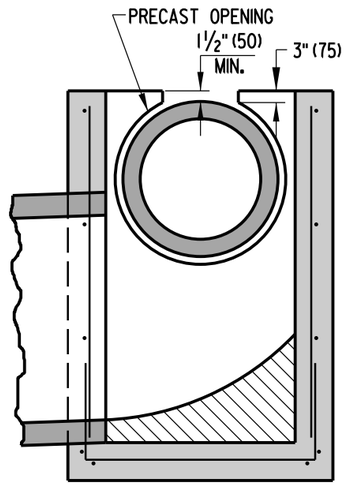

OPTIONAL PIPE OPENING DETAIL

SEE NOTE 5

INLET BOX SCHEDULE			
L	W	FABRICATION TOLERANCE	
17⅝" (450)	11⅝" (295)	+1" (25)	*
24" (610)	24" (610)	+1" (25)	*
34" (865)	18" (455)	-1" (25)	
34" (865)	24" (610)	-1" (25)	
48" (1220)	30" (760)	+6" (150)	
48" (1220)	48" (1220)	+6" (150)	
66" (1675)	30" (760)	+6" (150)	
66" (1675)	48" (1220)	+6" (150)	
66" (1675)	66" (1675)	+6" (150)	
72" (1830)	24" (610)	-1" (25)	
72" (1830)	48" (1220)	-1" (25)	
72" (1830)	72" (1830)	-1" (25)	

* - THESE BOXES ARE TO BE USED FOR LAWN INLETS AND ARE NOT INTENDED TO BE USED IN THE TRAVELWAY. THE MAX DEPTH FOR THESE BOXES IS 4' (1220). SEE NOTE 8 FOR REINFORCEMENT.

WALL REINFORCEMENT SCHEDULE		
INTERIOR WALL DIMENSION	AREA OF HORIZONTAL REINFORCEMENT PER FOOT (mm^2)	AREA OF VERTICAL REINFORCEMENT PER FOOT (mm^2)
	IN^2 (mm^2)	IN^2 (mm^2)
LESS THAN 4' (1220)	0.132 (85)	0.132 (85)
4' (1220) TO 4.5' (1370)	0.163 (105)	0.132 (85)
4.5' (1370) TO 5' (1525)	0.198 (128)	0.132 (85)
5' (1525) TO 5.5' (1675)	0.239 (154)	0.132 (85)
5.5' (1675) TO 6' (1830)	0.284 (183)	0.132 (85)

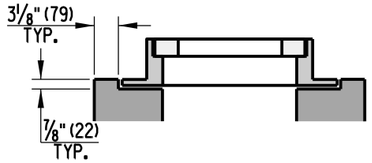

24" (610) x 24" (610) LAWN INLET BOX DETAIL

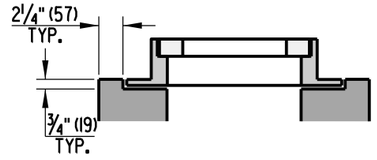

17⅝" (450) X 11⅝" (295) LAWN INLET BOX DETAIL

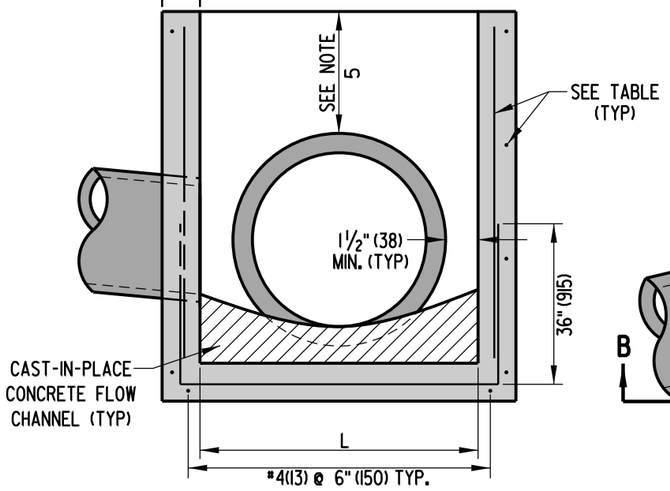

SECTION B-B

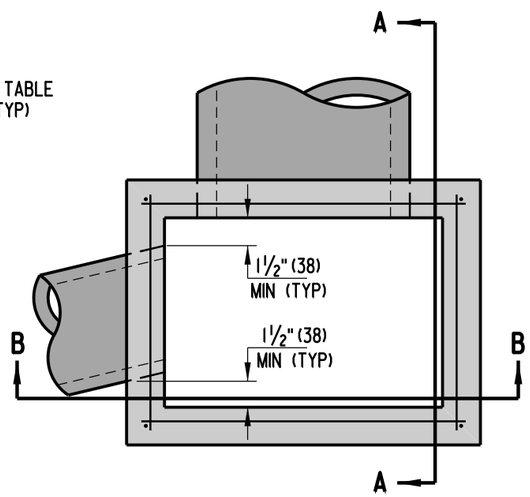

TOP VIEW

NOTES:

1). INLET BOXES SHALL BE PRECAST OR CAST-IN-PLACE.
2). PIPES SHALL NOT BE INSTALLED THROUGH ANY CORNER OF THE INLET BOX.
3). RISER SECTIONS MAY BE USED FOR DEEP INLET BOXES.
4). PIPES MAY BE INSTALLED NEAR OR THROUGH JOINTS FOR RISER SECTIONS.
5). WHEN THE COVER ABOVE THE PIPE IS LESS THAN 4" (100) TO THE COVER SLAB OR TOP UNIT OPENING, THE PORTION OF BOX WALL ABOVE THE PIPE MAY BE REMOVED AS SHOWN IN THE OPTIONAL PIPE OPENING DETAIL. THE AREA ABOVE THE PIPE SHALL THEN BE FORMED AND FILLED WITH HIGH-STRENGTH, NON-SHRINK GROUT MIXED WITH COARSE AGGREGATE IN A 1:1 RATIO BY WEIGHT.
6). CONCRETE FLOW CHANNEL SHALL BE WARPED FOR POSITIVE DRAINAGE.
7). WHEN INLET BOX IS PRECAST, PIPE OPENING SHALL BE BETWEEN 3" (75) AND 4" (100) LARGER THAN OUTSIDE DIAMETER OF PIPE AND SHALL NOT ENCROACH ON ADJACENT WALL.
8). REINFORCEMENT FOR LAWN INLET BOXES SHALL BE 4" (102) X 4" (102), W4 X W4 (W26 X W26) WELDED WIRE.

DELAWARE
DEPARTMENT OF TRANSPORTATION

INLET BOX DETAILS

STANDARD NO. D-4 (2009) | SHT. 1 OF 1

APPROVED SIGNATURE ON FILE (CHIEF ENGINEER) 01/19/2010 (DATE)

RECOMMENDED SIGNATURE ON FILE (DESIGN ENGINEER) 01/14/2010 (DATE)

08/19/2009

SCALE : N.T.S.

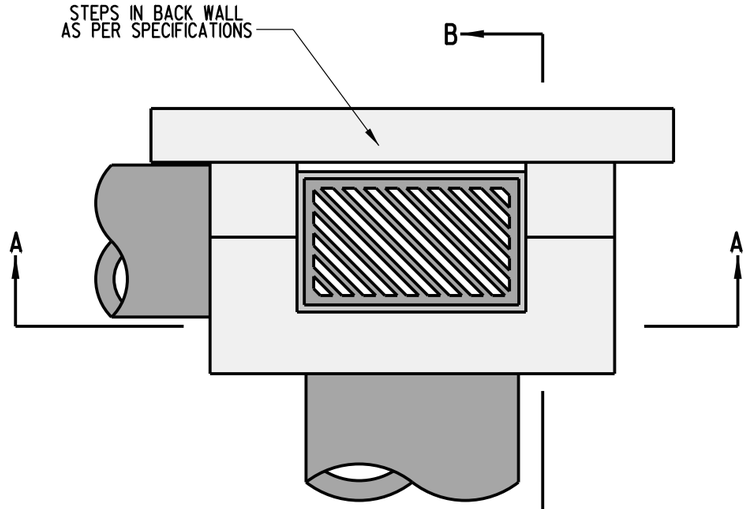

PLAN

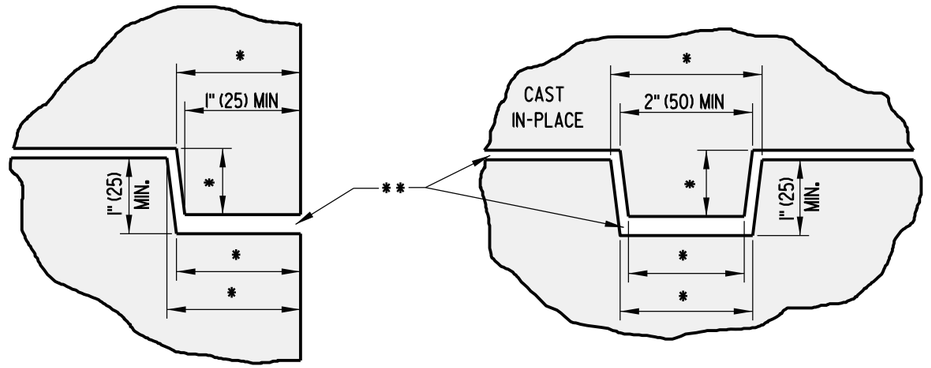

TYPE 1 JOINT DETAIL

TYPE 2 JOINT DETAIL

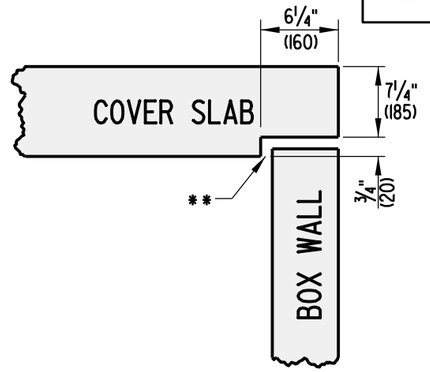

TYPE 3 JOINT DETAIL

* DIMENSIONS WILL VARY

** JOINT SEALANT AS PER SPECIFICATIONS
ONLY BETWEEN 2 PRECAST UNITS

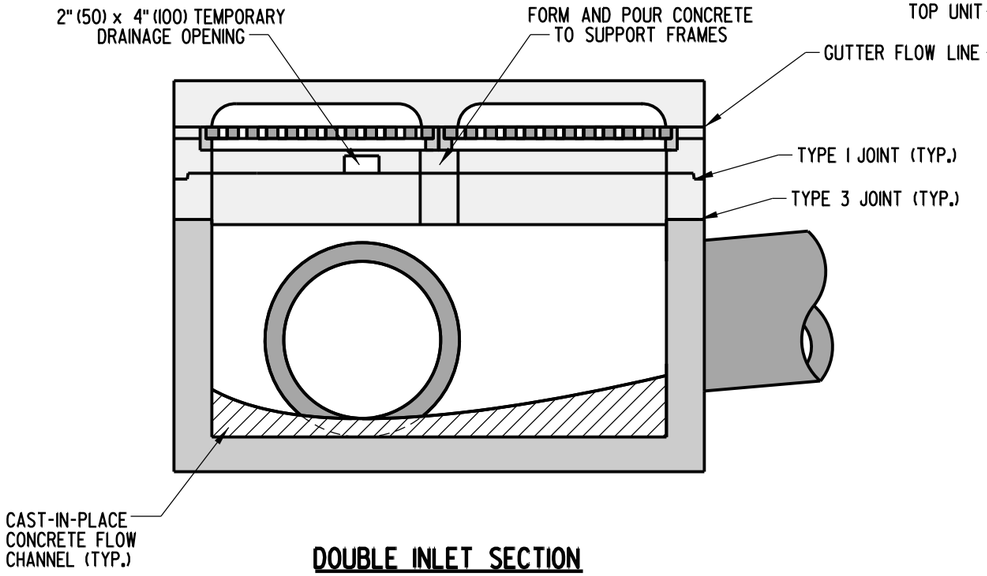

DOUBLE INLET SECTION

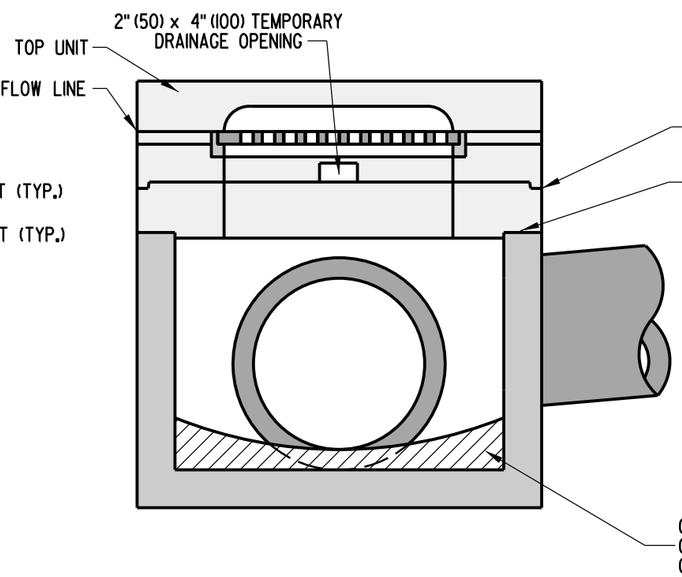

SECTION A-A

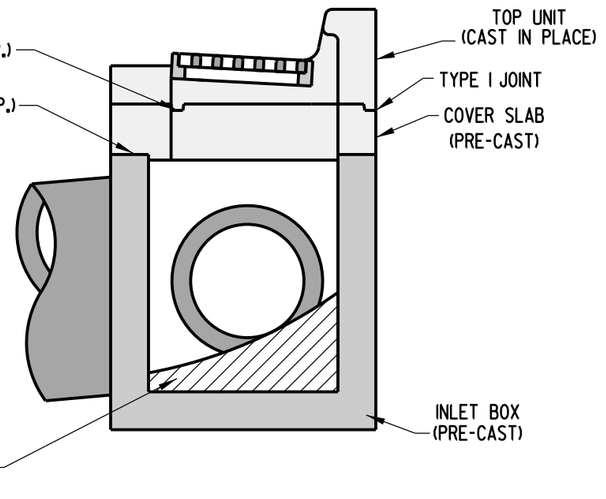

SECTION B-B

DELAWARE DEPARTMENT OF TRANSPORTATION	DRAINAGE INLET ASSEMBLY		APPROVED SIGNATURE ON FILE (CHIEF ENGINEER) 01/19/2010 (DATE)
	STANDARD NO. D-5 (2009)	SHT. 1 OF 8	RECOMMENDED SIGNATURE ON FILE (DESIGN ENGINEER) 01/14/2010 (DATE)

10/8/2009

SCALE : N.T.S.

DRAINAGE INLET FRAME AND GRATES

TYPE 1

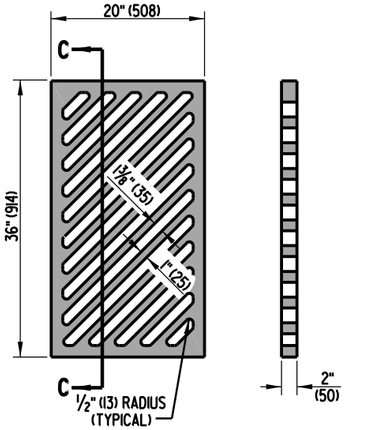

PLAN

SECTION C-C

TYPE 2

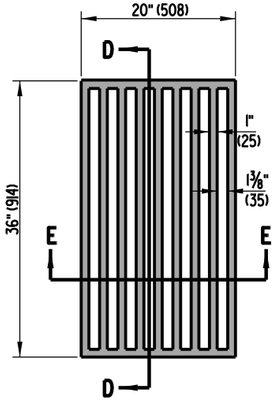

PLAN

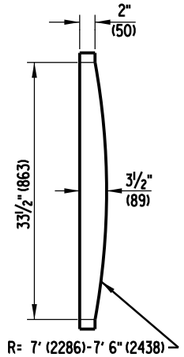

SECTION D-D

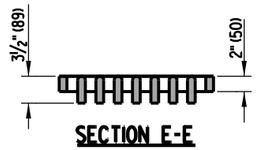

SECTION E-E

TYPE 3

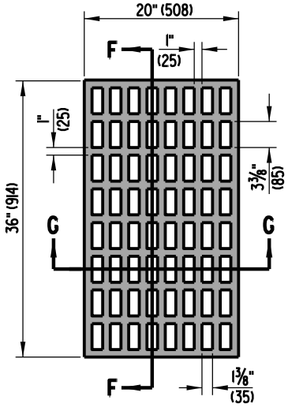

PLAN

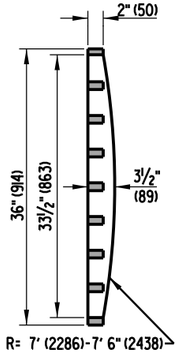

SECTION F-F

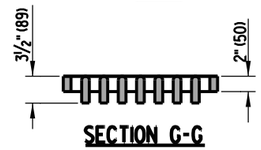

SECTION G-G

TYPE 4

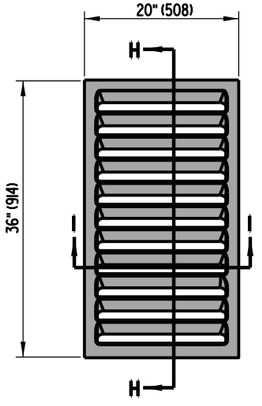

PLAN

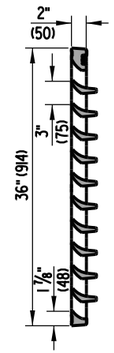

SECTION H-H

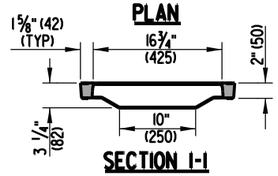

SECTION I-I

TYPE 5

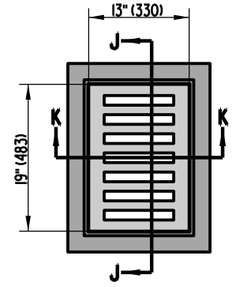

PLAN

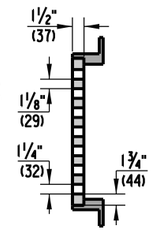

SECTION J-J

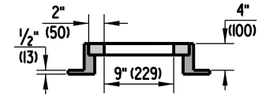

SECTION K-K

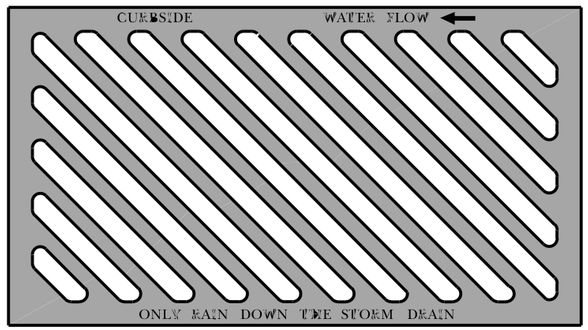

DRAINAGE GRATE LABELING EXAMPLE DETAIL

TYPE 6

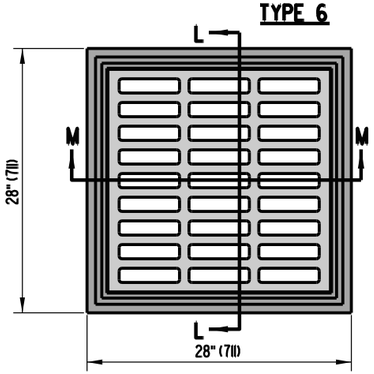

PLAN

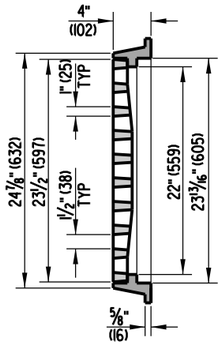

SECTION L-L

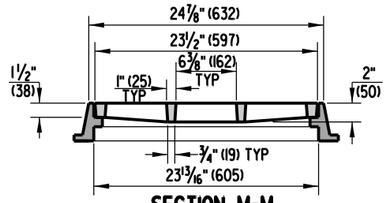

SECTION M-M

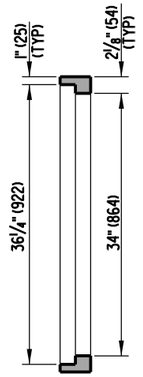

SECTION B-B

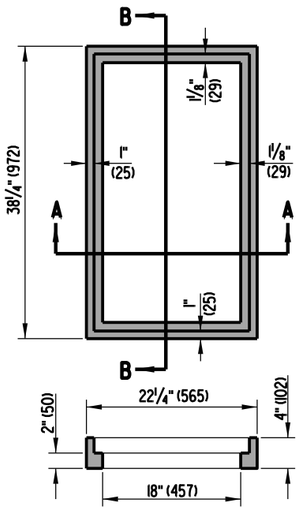

SECTION A-A

DRAINAGE INLET FRAME

THIS FRAME IS TO BE USED WITH TYPES I THROUGH 4 GRATES ONLY.

NOTES:

1). THE TYPE 2 DRAINAGE INLET GRATE SHALL NOT BE INSTALLED WHERE BICYCLE TRAFFIC MAY BE PRESENT.
2). THE TOP OF ALL DRAINAGE INLET GRATES SHALL BE LABELED "ONLY RAIN DOWN THE STORM DRAIN". ALSO, DRAINAGE INLET GRATES TYPE I AND TYPE 4 SHALL BE LABELED WITH "WATER FLOW" AND AN ARROW INDICATING FLOW DIRECTION AS SHOWN IN THE EXAMPLE DETAIL.
3). THE TYPE I DRAINAGE INLET GRATE SHALL BE LABELED WITH "CURBSIDE" AS SHOWN ON THE EXAMPLE DETAIL. ALL LABELING ON THE TYPE I SHALL BE ON BOTH TOP AND BOTTOM SIDES DUE TO THE TYPE I BEING REVERSIBLE.
4). THE TYPE 5 & 6 FRAME AND GRATE COMBINATIONS ARE TO BE USED IN CONJUNCTION WITH LAWN INLET BOXES ONLY. SEE SCHEDULE ON DETAIL D-4, SHEET 1 OF 1, FOR WHICH BOX SIZES ARE CONSIDERED LAWN INLET BOXES.
5). THE TYPE 6 FRAME AND GRATE COMBINATION SHOWN IS THE NEENAH FOUNDRY FRAME AND GRATE COMBINATION MODEL NF-1878-A5G, AN ACCEPTABLE ALTERNATIVE IS THE EAST JORDAN IRON WORKS FRAME AND GRATE COMBINATION MODEL V-5622.

DELAWARE
DEPARTMENT OF TRANSPORTATION

DRAINAGE INLET FRAME AND GRATES

STANDARD NO. D-5 (2009) | SHT. 2 OF 8

APPROVED SIGNATURE ON FILE (CHIEF ENGINEER) 01/19/2010 (DATE)

RECOMMENDED SIGNATURE ON FILE (DESIGN ENGINEER) 01/14/2010 (DATE)

12/01/2009

SCALE : N.T.S.

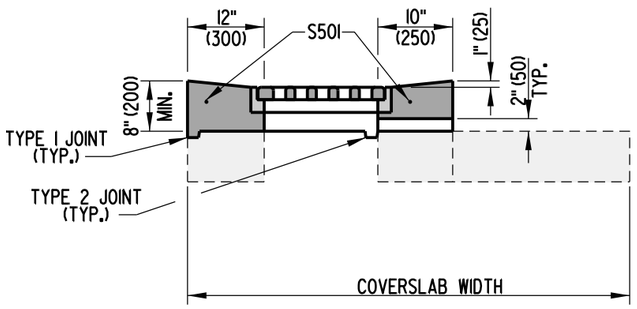

TYPE A

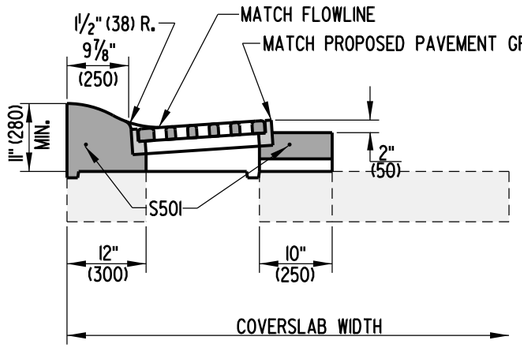

TYPE D

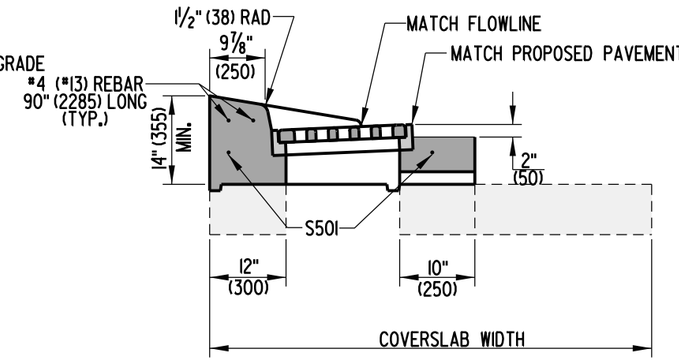

TYPE E

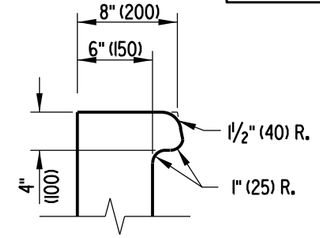

CURB OPENING DETAIL

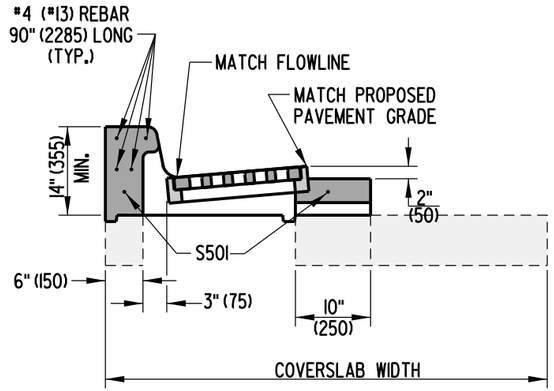

TYPE B

INLET TOP UNIT APPLICATIONS	
TOP UNIT	**CURB**
TYPE A	USE IN DRAINAGE SWALE
TYPE B	INTEGRAL PCC CURB & GUTTER, TYPE 1 & 3, PCC CURB TYPE 1
TYPE C	INTEGRAL PCC CURB & GUTTER, TYPE 4, PCC CURB TYPE 3
TYPE D	INTEGRAL PCC CURB & GUTTER, TYPE 2
TYPE E	PCC CURB TYPE 2

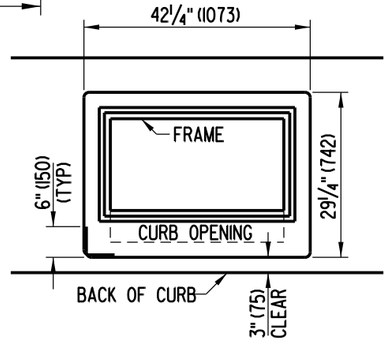

S501 BENDING DIAGRAM

S501 IS NOT REQUIRED TO BE ONE CONTINUOUS BAR. IF MORE THAN ONE BAR IS USED, THERE MUST BE A 12" (300) OVERLAP BETWEEN BARS.

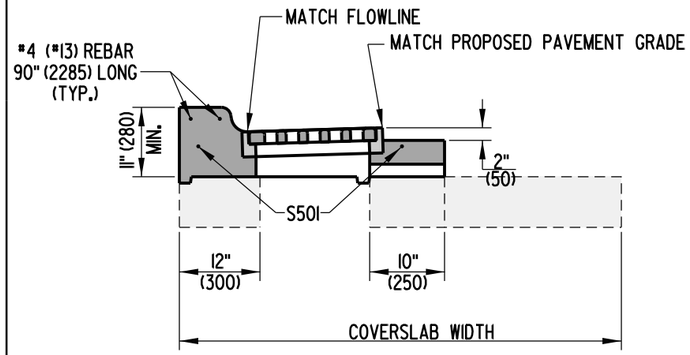

TYPE C

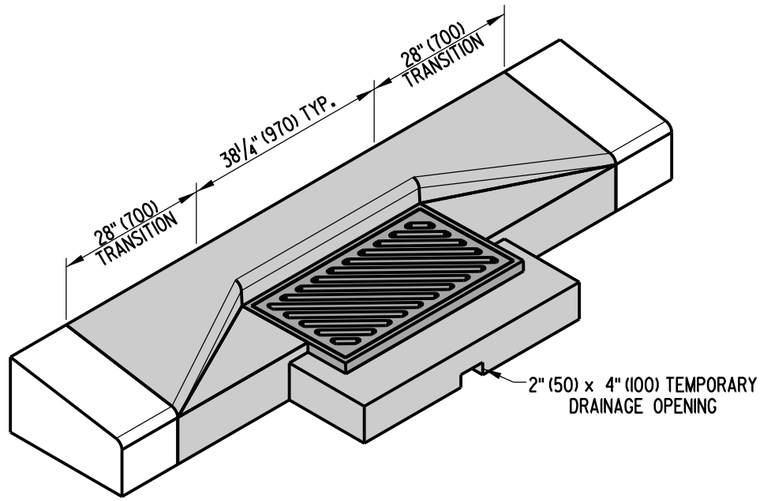

ISOMETRIC VIEW

TYPE E UNIT SHOWN

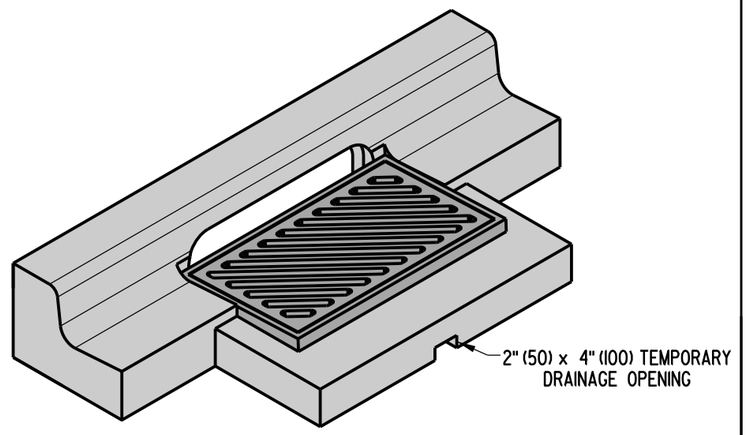

ISOMETRIC VIEW

TYPE B TOP UNIT SHOWN WITH INTEGRAL CURB & GUTTER TYPE 3

DELAWARE
DEPARTMENT OF TRANSPORTATION

DRAINAGE INLET TOP UNITS

STANDARD NO. D-5 (2009) | **SHT.** 3 **OF** 8

APPROVED SIGNATURE ON FILE (CHIEF ENGINEER) 01/19/2010 (DATE)

RECOMMENDED SIGNATURE ON FILE (DESIGN ENGINEER) 01/14/2010 (DATE)

12/22/2009

SCALE : N.T.S.

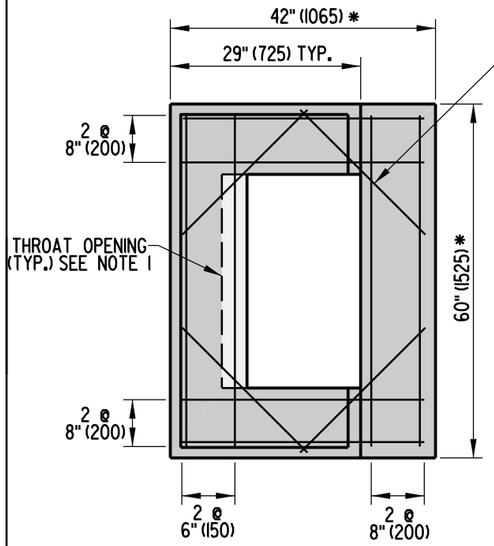

48" (1220) x 30" (760) INLET

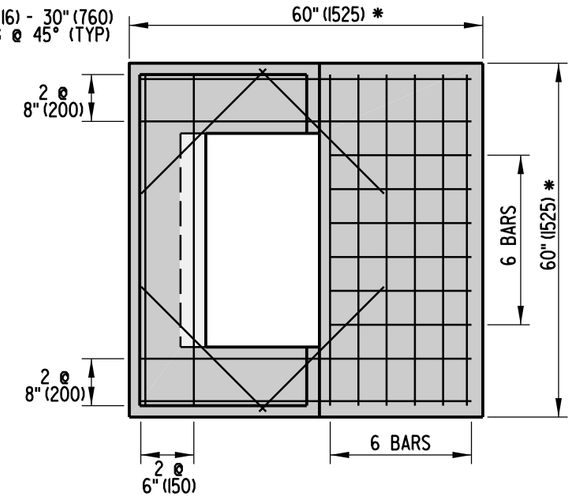

48" (1220) x 48" (1220) INLET

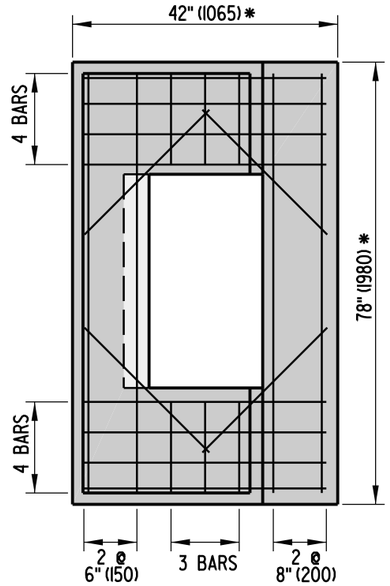

66" (1675) x 30" (760) INLET

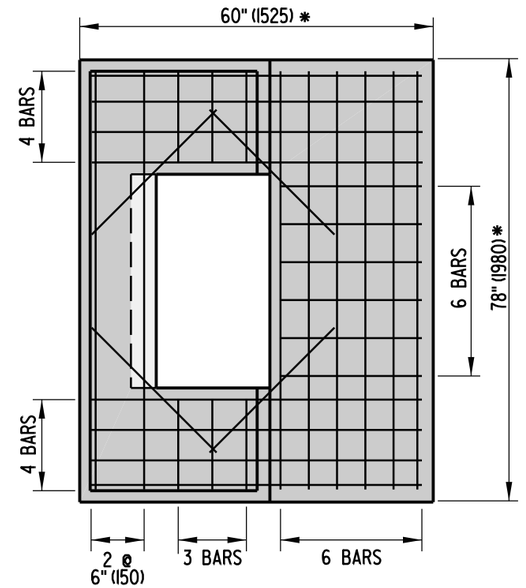

66" (1675) x 48" (1220) INLET

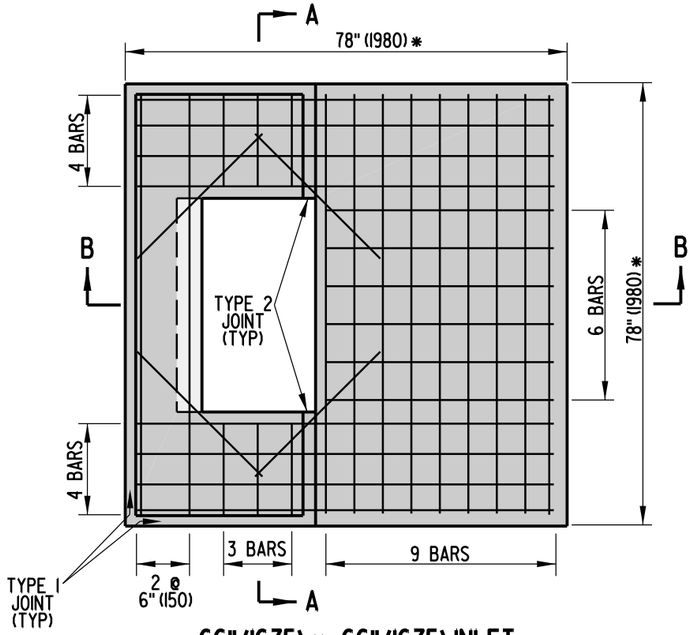

66" (1675) x 66" (1675) INLET

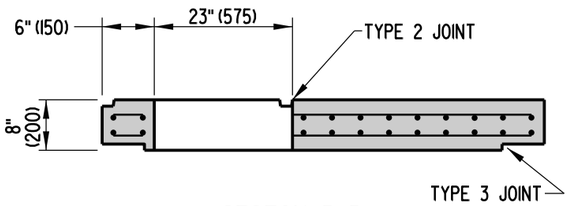

SECTON B-B
FOR TYPE B TOP UNITS

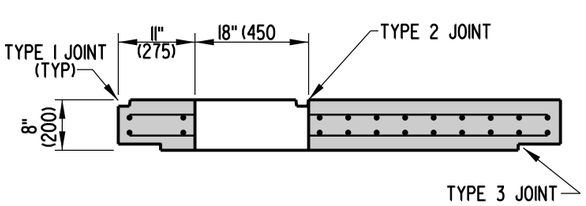

SECTON B-B
FOR TYPES A, C, D, & E TOP UNITS

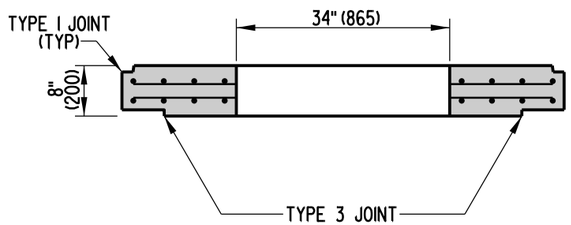

SECTION A-A

NOTES :

1). RELOCATE ENCROACHING REINFORCING BARS WHEN USING TYPE B UNIT.
2). COVER SLABS SHALL BE PRECAST AND MUST BE SIZED TO FIT INLET BOX DIMENSIONS.
3). ALL BARS ARE TO BE #5 (#16) SPACED @ 6" (150) UNLESS NOTED OTHERWISE. TOP REINFORCEMENT SHALL BE 0.11 IN^2 (70 mm^2) HORIZONTAL REINFORCEMENT PER FOOT IN BOTH DIRECTIONS.
4). MINIMUM BAR COVER = 1½" (38).

* - DIMENSIONS TO MATCH OUTSIDE TO OUTSIDE DIMENSIONS OF BOX.

DELAWARE DEPARTMENT OF TRANSPORTATION	DRAINAGE INLET COVER SLAB DETAILS	APPROVED SIGNATURE ON FILE (CHIEF ENGINEER) 01/19/2010 (DATE)
	STANDARD NO. D-5 (2009) — SHT. 4 OF 8	RECOMMENDED SIGNATURE ON FILE (DESIGN ENGINEER) 01/14/2010 (DATE)

12/01/2009

SCALE : N.T.S.

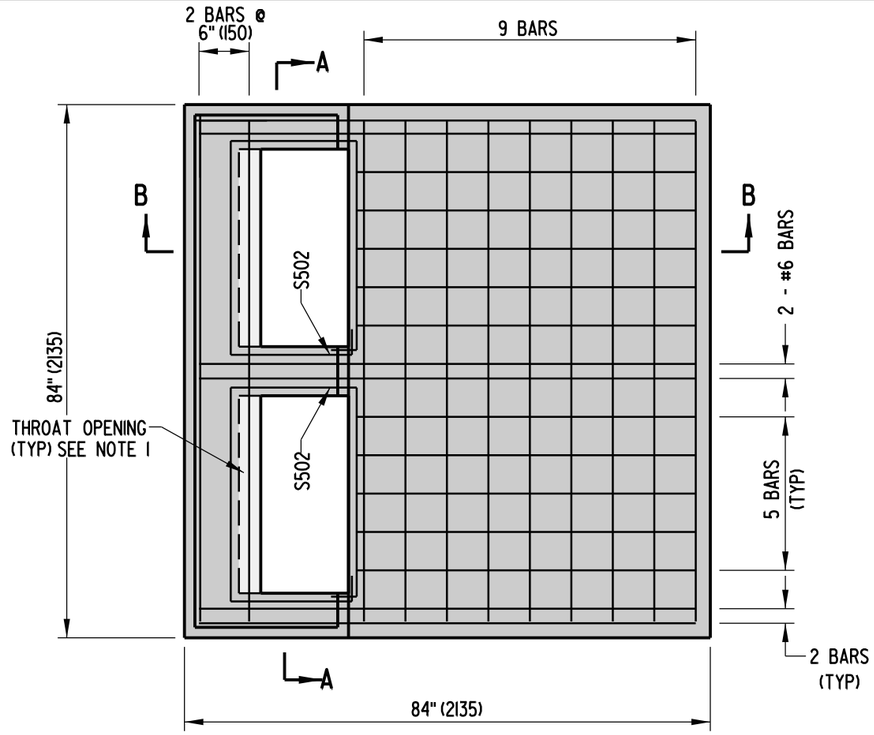

72" (1830) x 72" (1830) INLET

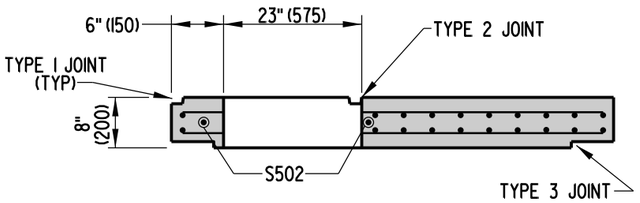

SECTON B-B
FOR TYPE B TOP UNITS

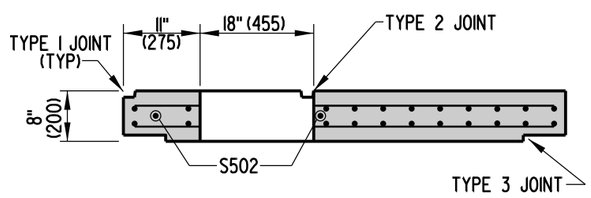

SECTON B-B
FOR TYPES A, C, D, & E TOP UNITS

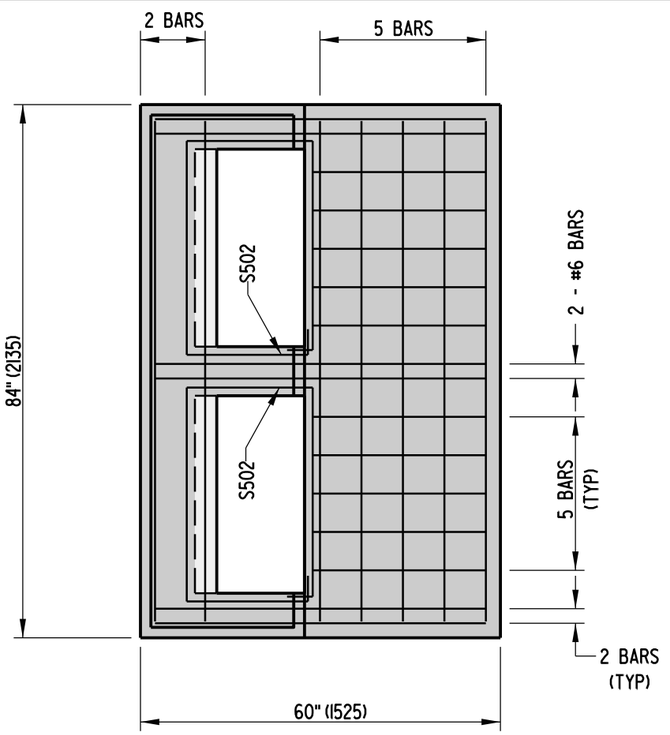

72" (1830) x 48" (1220) INLET

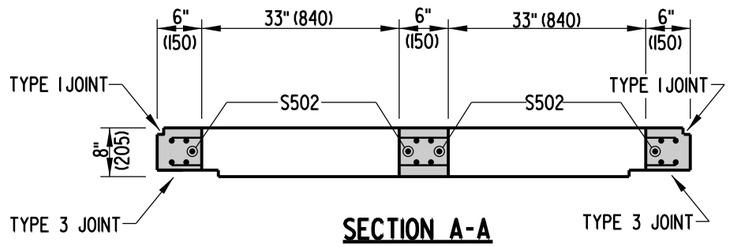

SECTION A-A

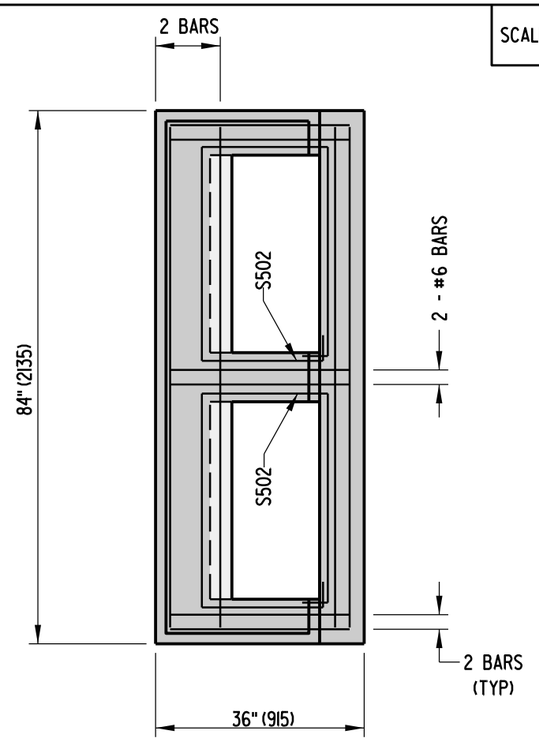

72" (1830) x 24" (610) INLET

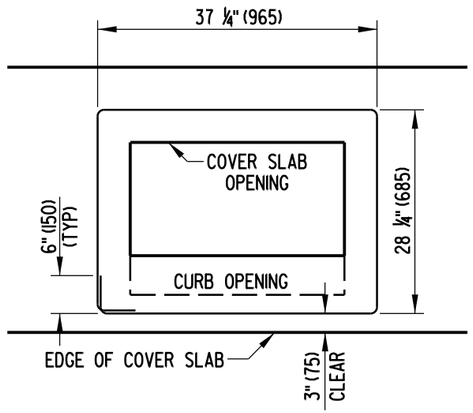

S502 BENDING DIAGRAM

S502 IS NOT REQUIRED TO BE ONE CONTINUOUS BAR. IF MORE THAN ONE BAR IS USED, THERE MUST BE A 12" (300) OVERLAP BETWEEN BARS.

NOTES :

1). RELOCATE ENCROACHING REINFORCING BARS WHEN USING TYPE B TOP UNIT.
2). COVER SLABS ARE TO BE PRECAST AND MUST BE SIZED TO FIT INLET BOX DIMENSIONS.
3). ALL BARS ARE TO BE #5 (#16) SPACED @ 6" (150) UNLESS NOTED OTHERWISE. TOP REINFORCEMENT SHALL BE 0.11 IN^2 (70 mm^2) MIN. HORIZONAL REINFORCEMENT PER FOOT IN BOTH DIRECTIONS.
4). MINIMUM BAR COVER = 1½" (38).

DELAWARE
DEPARTMENT OF TRANSPORTATION

DOUBLE INLET COVER SLAB DETAILS

STANDARD NO. D-5 (2009) | SHT. 5 OF 8

APPROVED SIGNATURE ON FILE (CHIEF ENGINEER) 01/19/2010 (DATE)

RECOMMENDED SIGNATURE ON FILE (DESIGN ENGINEER) 01/14/2010 (DATE)

10/8/2009

SCALE : N.T.S.

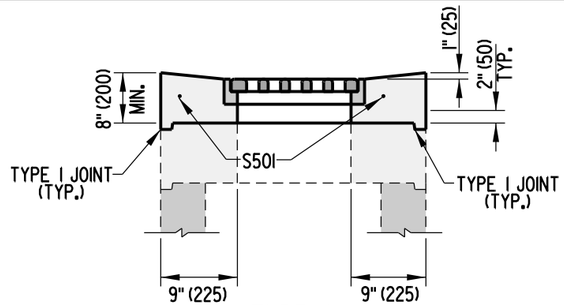

TYPE A

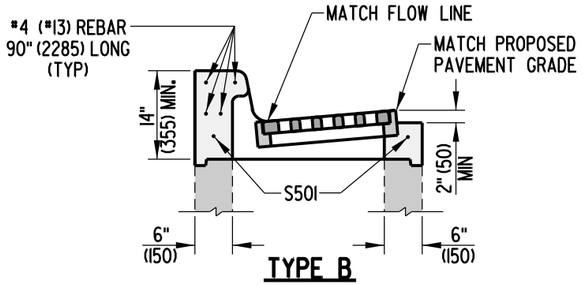

TYPE B

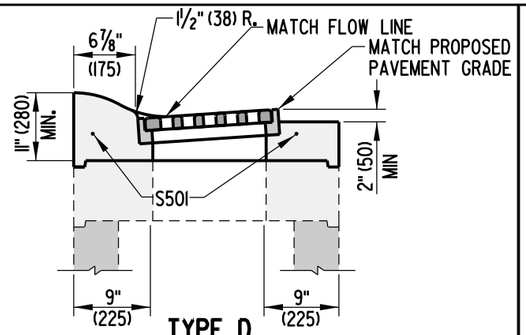

TYPE D

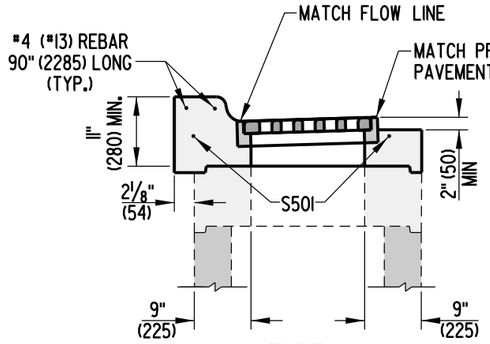

TYPE C

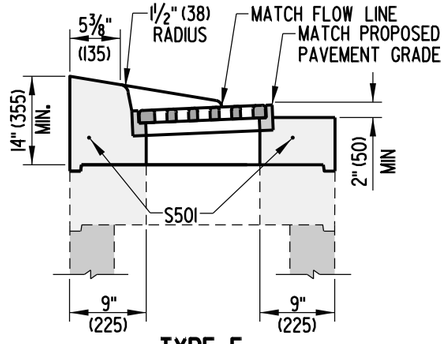

TYPE E

TOP UNIT DETAILS

NOTE: SEE DETAIL D-5, SHEET 3 OF 8 FOR INLET TOP UNIT APPLICATIONS.

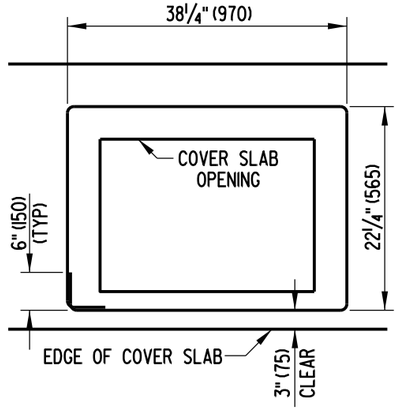

S503 BENDING DIAGRAM

S503 IS NOT REQUIRED TO BE ONE CONTINUOUS BAR. IF MORE THAN ONE BAR IS USED, THERE MUST BE A 12" (300) OVERLAP BETWEEN BARS.

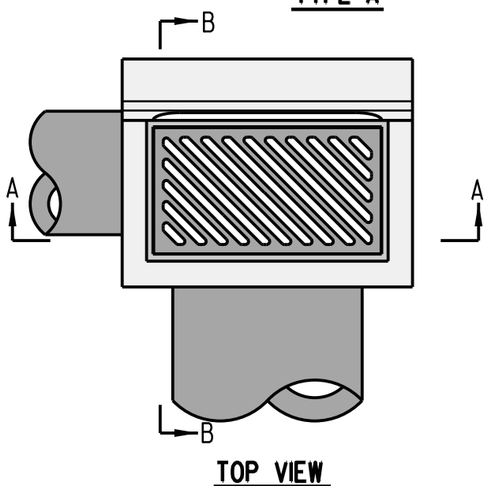

TOP VIEW

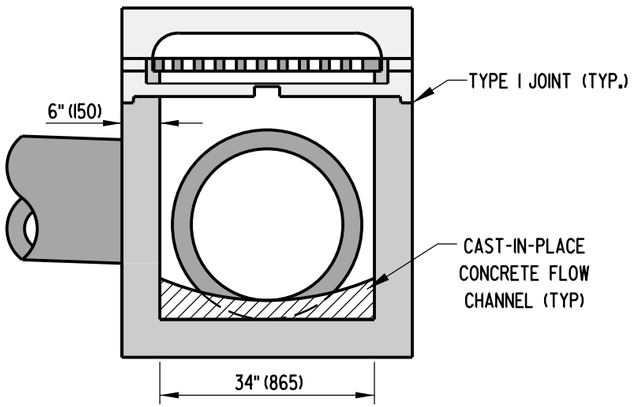

SECTION A-A

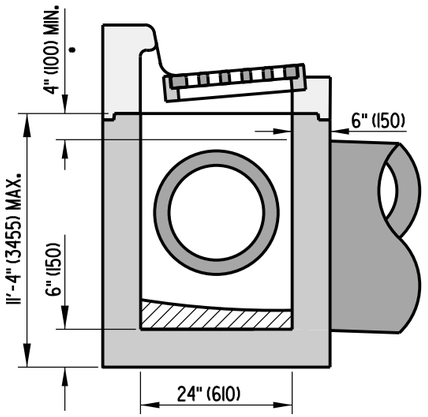

SECTION B-B

DRAINAGE INLET DETAILS

NOTE: REFER TO PREVIOUS SHEETS FOR REINFORCING REQUIREMENTS
• - SEE OPTIONAL PIPE OPENING DETAIL ON STANDARD NO. D-4, SHEET 1 OF 1

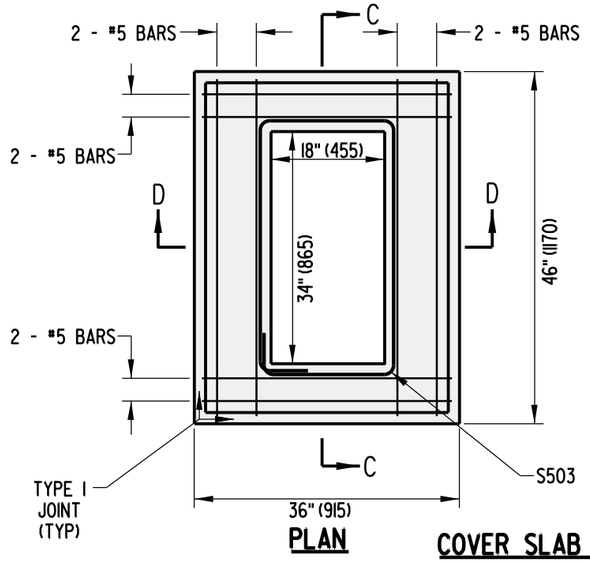

PLAN

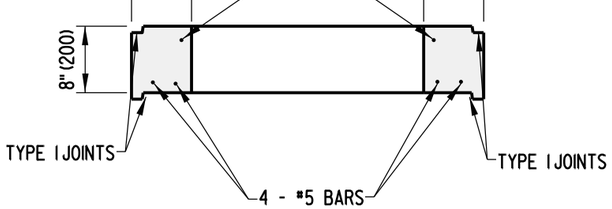

SECTION C-C

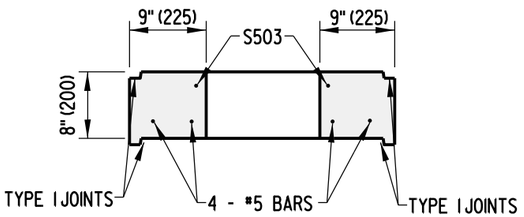

SECTION D-D

COVER SLAB DETAILS

NOTE: COVER SLAB IS ONLY NEEDED FOR TYPES A, D, & E TOP UNITS FOR THE 34" (865) x 24" (610) DRAINAGE INLET.

DELAWARE
DEPARTMENT OF TRANSPORTATION

34" (865) x 24" (610) DRAINAGE INLET AND COVER SLAB DETAILS

STANDARD NO. D-5 (2009)	SHT. 6 OF 8	APPROVED	SIGNATURE ON FILE (CHIEF ENGINEER) — 01/19/2010 (DATE)
		RECOMMENDED	SIGNATURE ON FILE (DESIGN ENGINEER) — 01/14/2010 (DATE)

01/04/2010

SCALE : N.T.S.

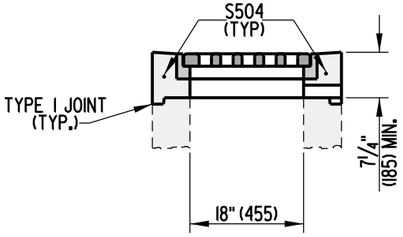

TYPE A

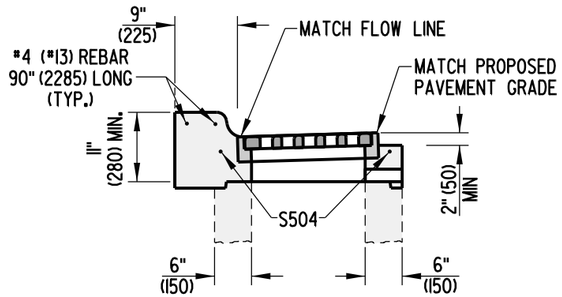

TYPE C

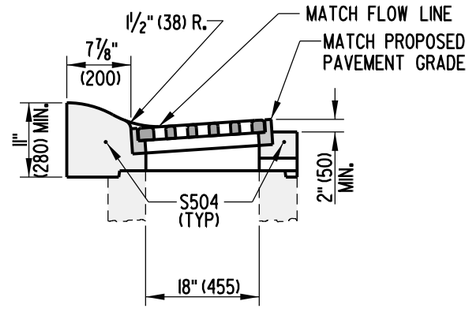

TYPE D

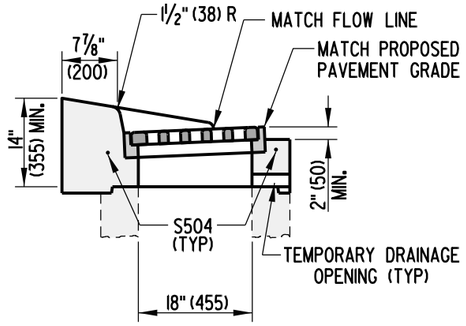

TYPE E

TOP UNIT DETAILS

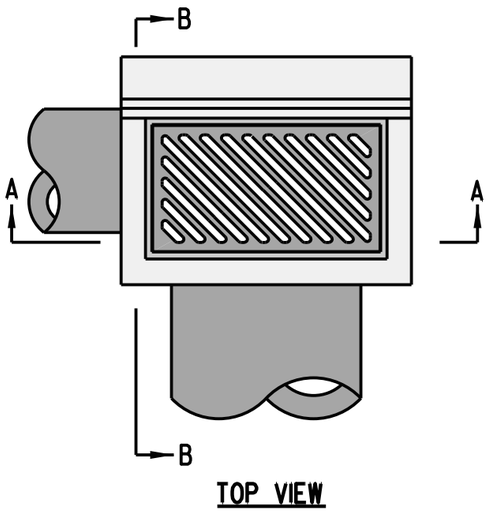

TOP VIEW

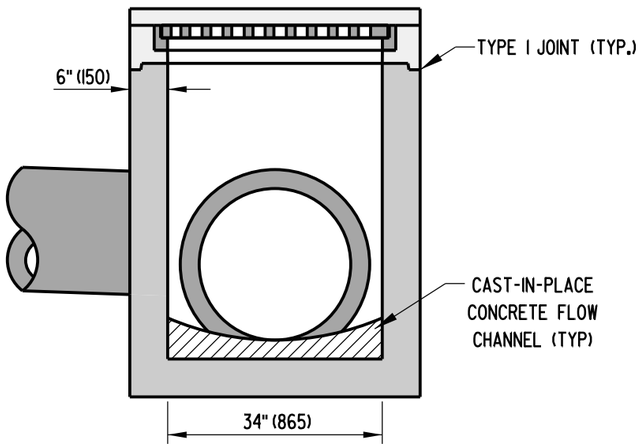

SECTION A-A

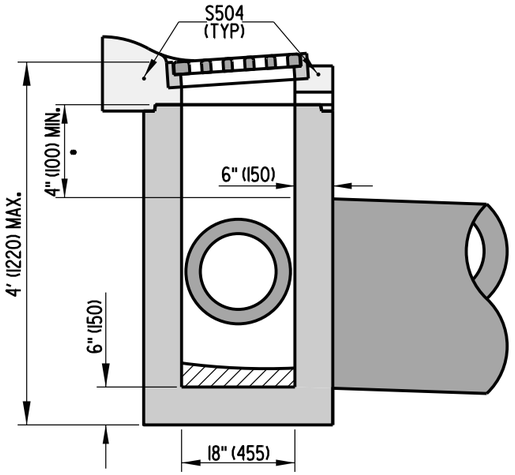

SECTION B-B

• - SEE OPTIONAL PIPE OPENING DETAIL ON STANDARD D-4, SHEET 1OF 1.

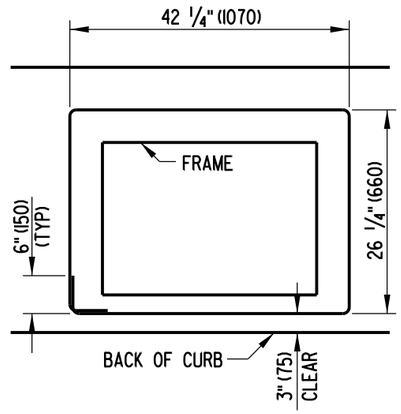

S504 BENDING DIAGRAM

S504 IS NOT REQUIRED TO BE ONE CONTINUOUS BAR. IF MORE THAN ONE BAR IS USED, THERE MUST BE A 12" (300) OVERLAP BETWEEN BARS.

NOTES:

1.) REFER TO PREVIOUS SHEETS FOR REINFORCEMENT REQUIREMENTS
2.) THE HEIGHT OF THIS INLET IS LIMITED TO 4' (1220) MAXIMUM, THEREFORE STEPS WILL NOT BE REQUIRED AND SHOULD NOT BE INSTALLED ON THIS INLET.
3). REFER TO DETAIL D-5, SHEET 3 OF 8 FOR INLET TOP UNIT APPLICATION.

DELAWARE DEPARTMENT OF TRANSPORTATION	34" (865) x 18" (455) DRAINAGE INLET DETAILS		APPROVED SIGNATURE ON FILE (CHIEF ENGINEER) 01/19/2010 (DATE)
	STANDARD NO. D-5 (2009)	SHT. 7 OF 8	RECOMMENDED SIGNATURE ON FILE (DESIGN ENGINEER) 01/14/2010 (DATE)

01/05/2010

SCALE : N.T.S.

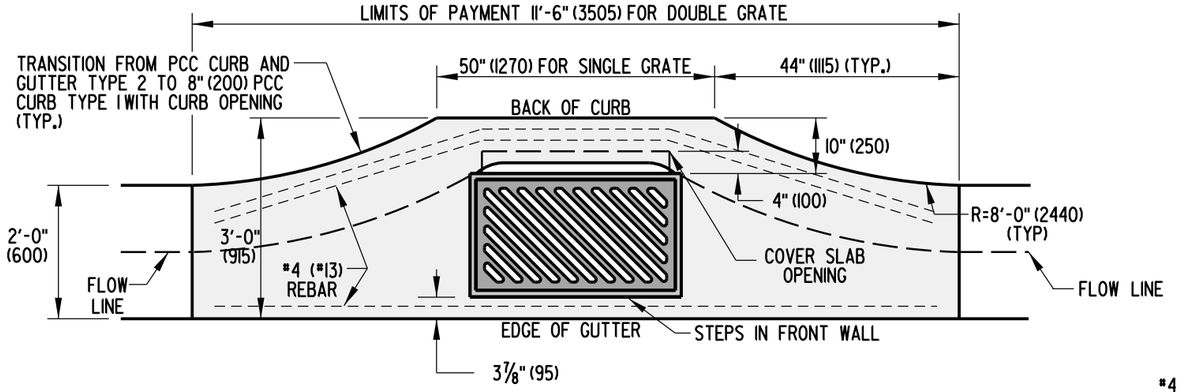

SINGLE GRATE SETUP

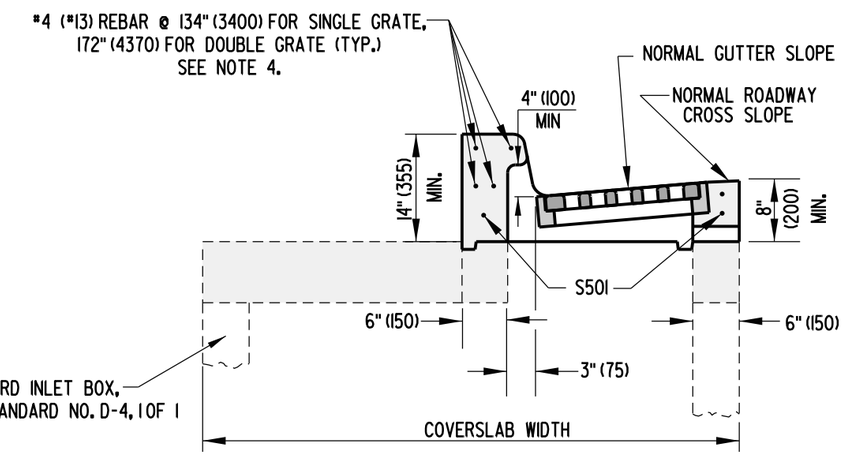

SUBDIVISION TOP & CONFIGURATION

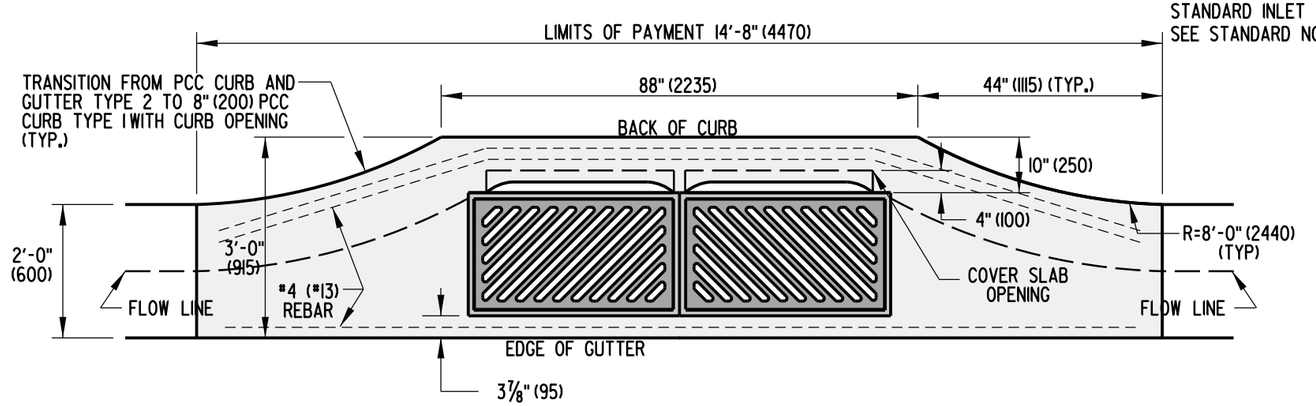

DOUBLE GRATE SETUP

NOTES:

1). MINIMUM BOX SIZE TO BE 34" (850) X 24" (600).
2). PIPE OPENINGS IN THE FRONT WALL SHALL NOT INTERFERE WITH THE STEPS. THE PIPE SHALL BE SHIFTED HORIZONTALLY TO AVOID THE STEPS. IT MAY BE NECESSARY TO USE A LARGER BOX TO AVOID CONFLICT BETWEEN STEPS AND PIPE OPENING.
3). SEE DETAIL D-5, SHEET 3 OF 9, FOR S501 BAR DIAGRAM.
4). THE REBAR IN THE HEAD IS PREFERRED TO BE 1 CONTINUOUS PIECE, HOWEVER, IF MULTIPLE PIECES ARE TO BE USED, EACH PIECE SHALL OVERLAP BY 12" (300) MINIMUM AND THE FINAL LENGTH OF THE SPLICED REBAR SHALL BE AS NOTED ON THIS DETAIL.

DELAWARE DEPARTMENT OF TRANSPORTATION	DRAINAGE INLET TOP UNIT, TYPE S		APPROVED SIGNATURE ON FILE (CHIEF ENGINEER) 01/19/2010 (DATE)
	STANDARD NO. D-5 (2009)	SHT. 8 OF 8	RECOMMENDED SIGNATURE ON FILE (DESIGN ENGINEER) 01/14/2010 (DATE)

12/01/2009

SCALE : N.T.S.

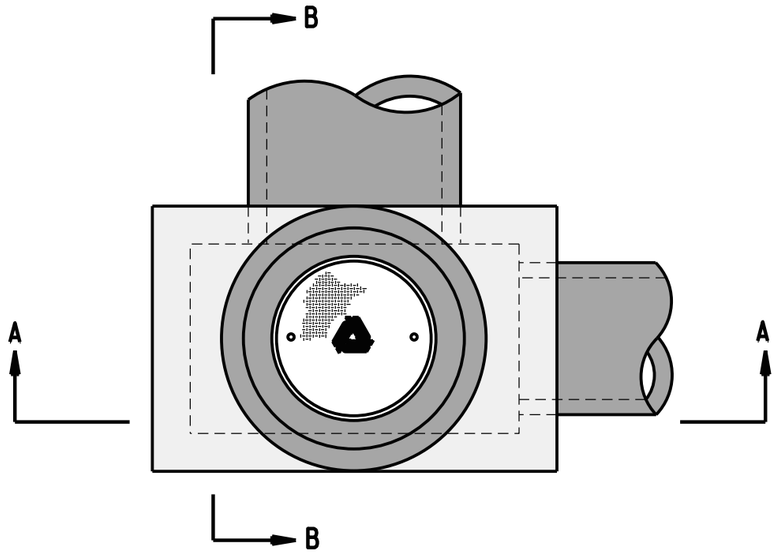

PLAN

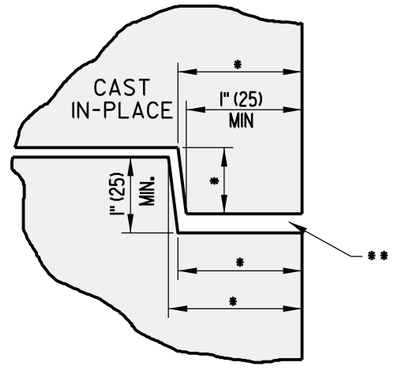

TYPE 1 JOINT DETAIL

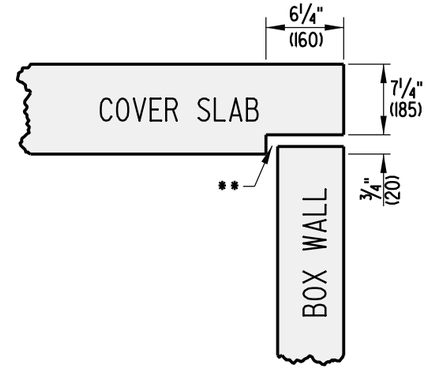

TYPE 3 JOINT DETAIL

* DIMENSIONS MAY VARY
** JOINT SEALANT AS PER SPECIFICATIONS ONLY BETWEEN 2 PRECAST UNITS

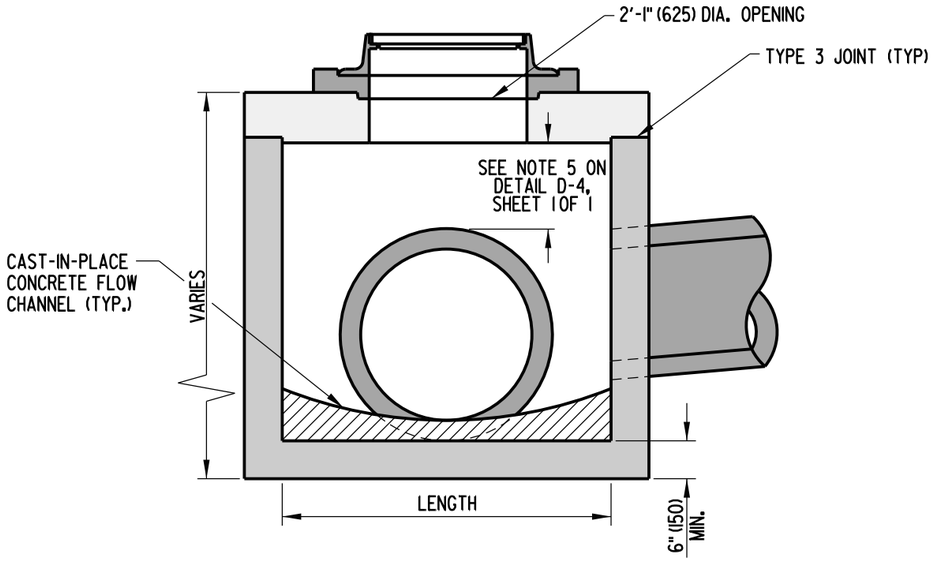

SECTION A-A

• - SEE OPTIONAL PIPE OPENING DETAIL ON STANDARD D-4, SHEET 1 OF 1.

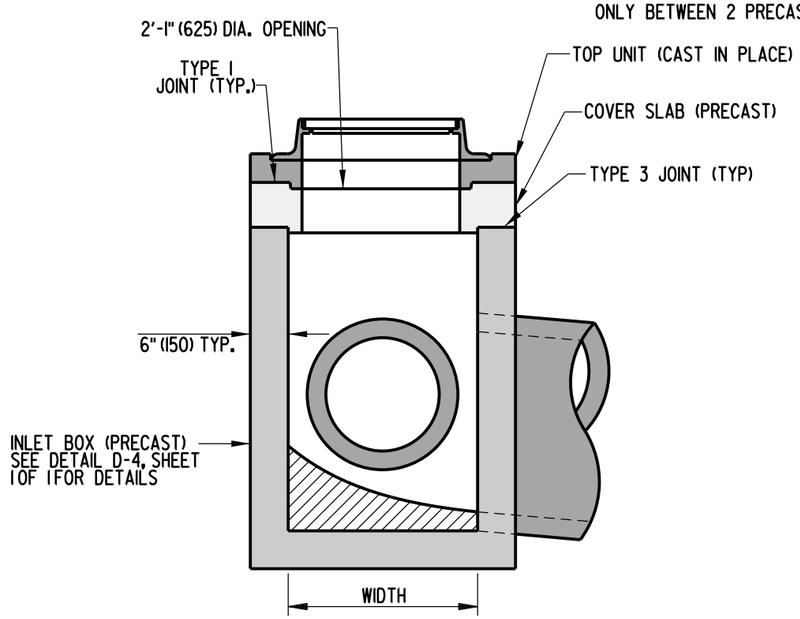

SECTION B-B

BOX MANHOLE ASSEMBLY

DELAWARE DEPARTMENT OF TRANSPORTATION	MANHOLE DETAILS		APPROVED SIGNATURE ON FILE (CHIEF ENGINEER) 01/19/2010 (DATE)
	STANDARD NO. D-6 (2009)	SHT. 1 OF 4	RECOMMENDED SIGNATURE ON FILE (DESIGN ENGINEER) 01/14/2010 (DATE)

10/20/2009

SCALE : N.T.S.

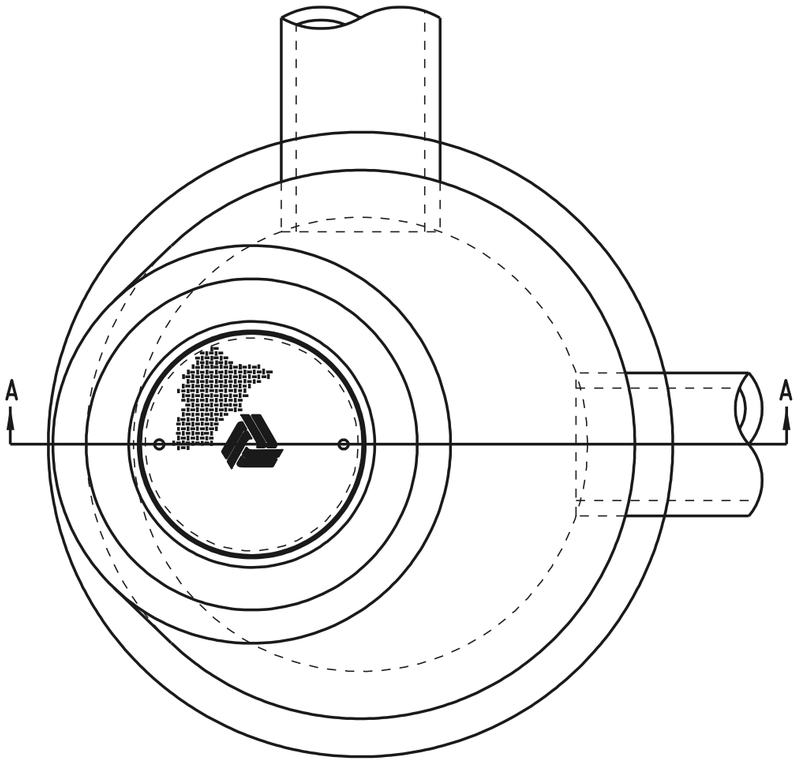

PLAN

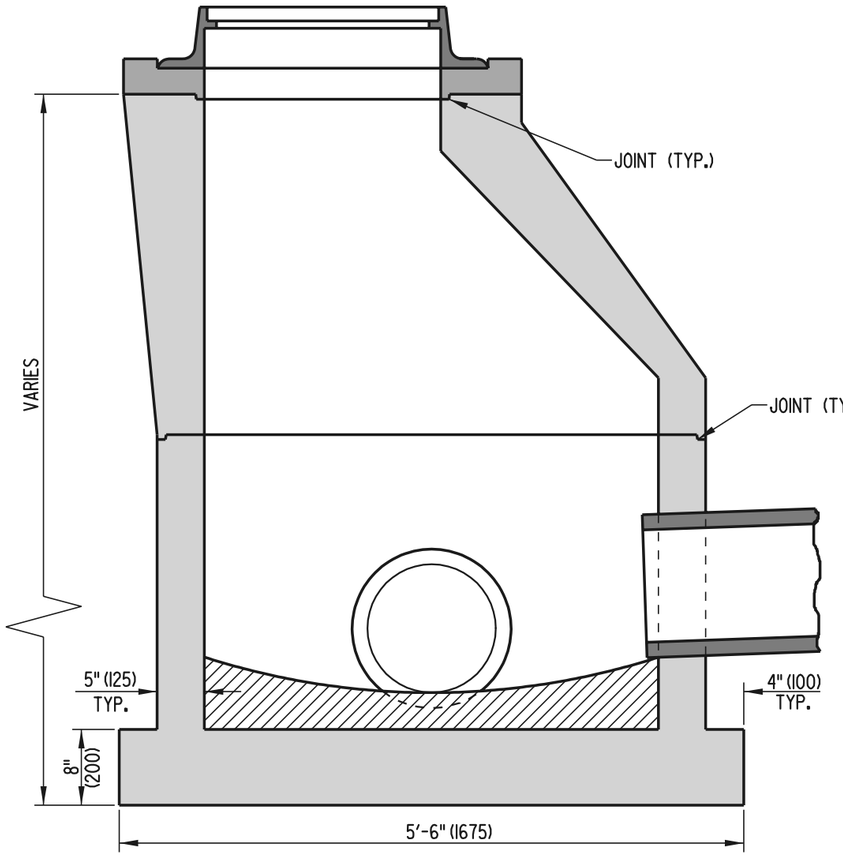

SECTION A-A

ROUND MANHOLE ASSEMBLY

NOTE: ROUND MANHOLES SHALL BE CONSTRUCTED IN ACCORDANCE WITH AASHTO M 199.

DELAWARE DEPARTMENT OF TRANSPORTATION	MANHOLE DETAILS		APPROVED [signature] CHIEF ENGINEER 6/18/01 DATE
	STANDARD NO. D-6 (2001)	SHT. 2 OF 4	RECOMMENDED [signature] DESIGN ENGINEER 6/15/01 DATE

06/06/2001

SCALE : N.T.S.

NOTE: TOP UNIT IS TO BE CAST IN PLACE TO GRADE AS SPECIFIED ON PLAN SHEETS OR AS DIRECTED BY ENGINEER.

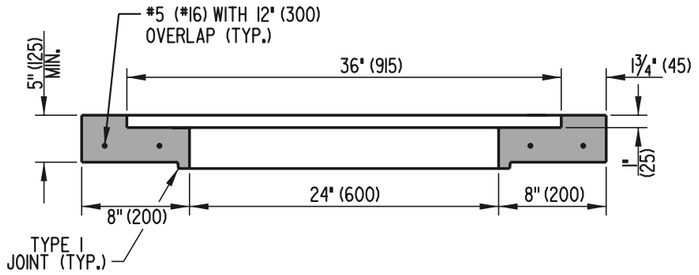

SECTION A-A

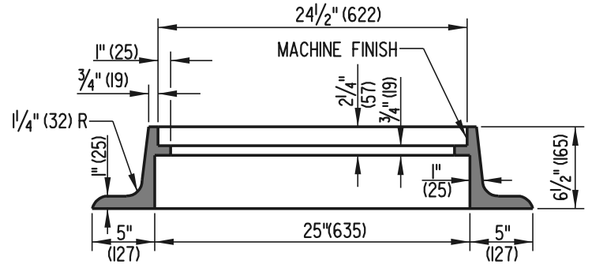

SECTION B-B

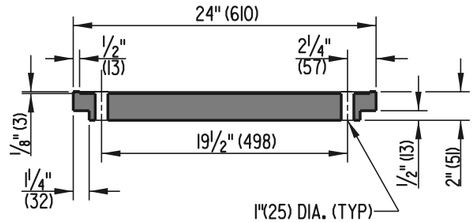

SECTION C-C

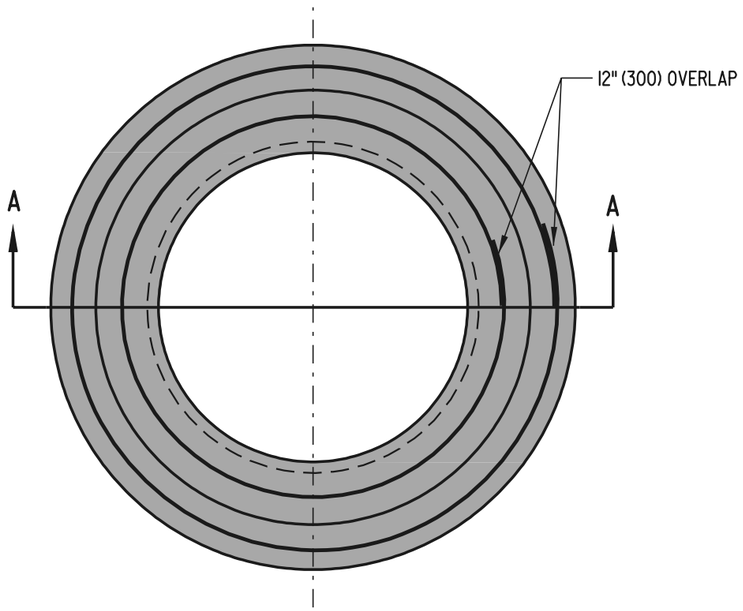

TOP UNIT

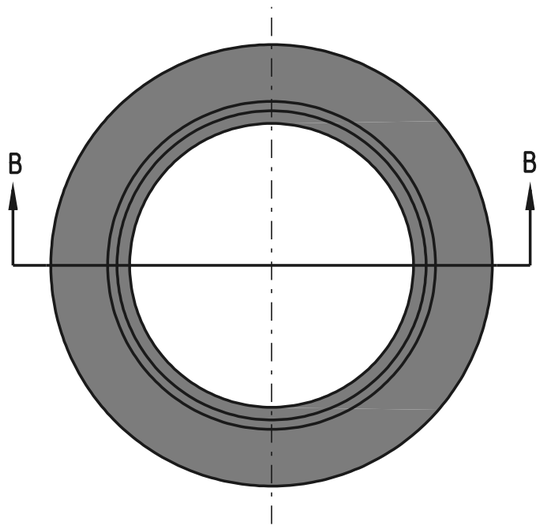

FRAME

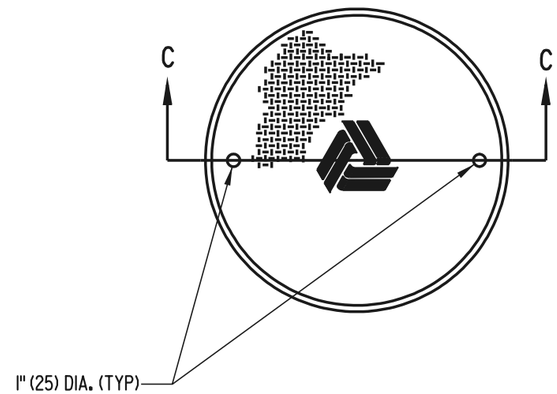

COVER

DELAWARE DEPARTMENT OF TRANSPORTATION	MANHOLE DETAILS		APPROVED [signature] CHIEF ENGINEER 6/18/01 DATE
	STANDARD NO. D-6 (2001)	SHT. 3 OF 4	RECOMMENDED [signature] DESIGN ENGINEER 6/15/01 DATE

05/21/2001

SCALE : N.T.S.

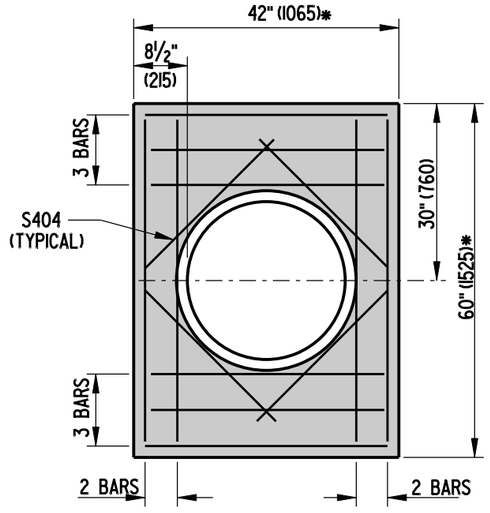

48" (1220) X 30" (760) MANHOLE

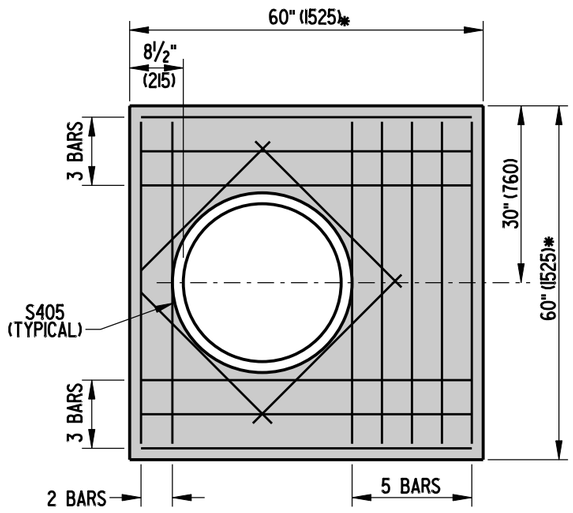

48" (1220) X 48" (1220) MANHOLE

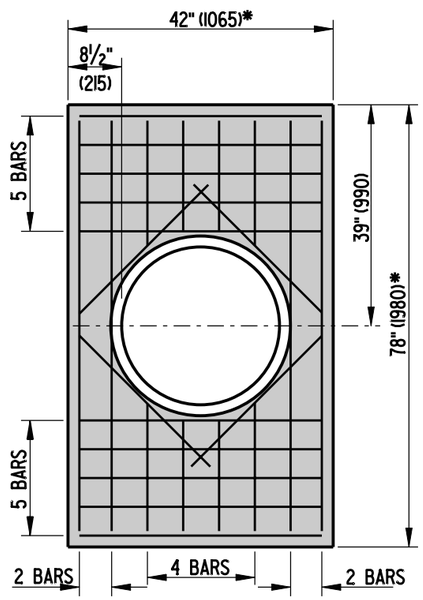

66" (1675) x 30" (760) MANHOLE

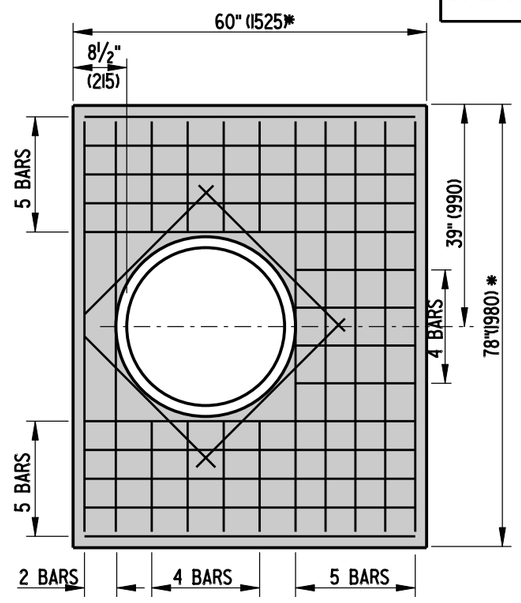

66" (1675) x 48" (1220) MANHOLE

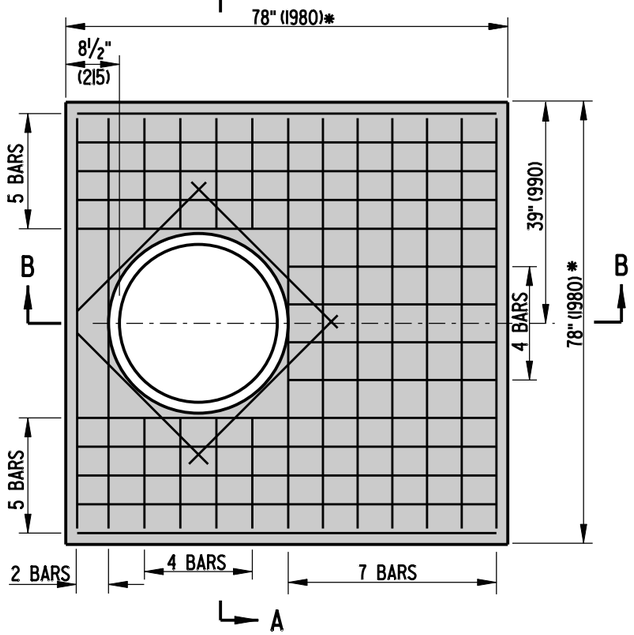

66" (1675) x 66" (1675) MANHOLE

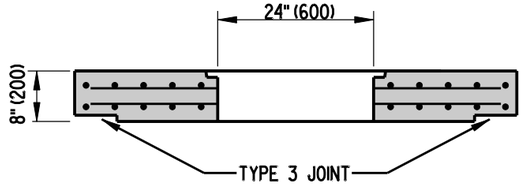

SECTION A-A

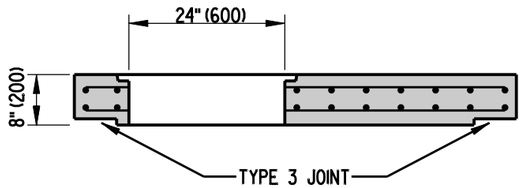

SECTION B-B

BOX MANHOLE COVER SLAB DETAILS

NOTES:

1. COVER SLABS SHALL BE PRE-CAST.
2. ALL BARS SHALL BE #5 (#16) SPACED AT 6" (150) ± UNLESS NOTED OTHERWISE.
3. MINIMUM BAR COVER = 1½" (38).

*- DIMENSIONS TO MATCH OUTSIDE TO OUTSIDE DIMENSIONS OF BOX.

DELAWARE DEPARTMENT OF TRANSPORTATION	MANHOLE DETAILS		APPROVED CHIEF ENGINEER 10/24/07 DATE
	STANDARD NO. D-6 (2007)	SHT. 4 OF 4	RECOMMENDED DESIGN ENGINEER 10/23/07 DATE

08/01/2007

SCALE : N.T.S.

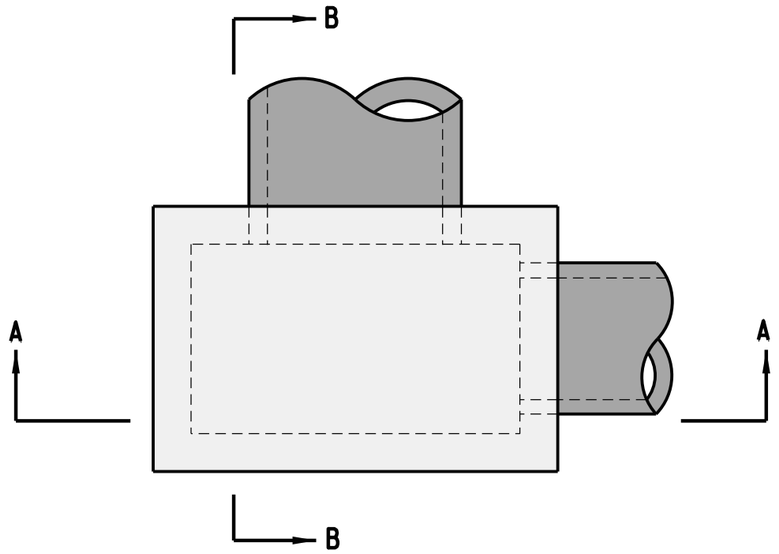

PLAN

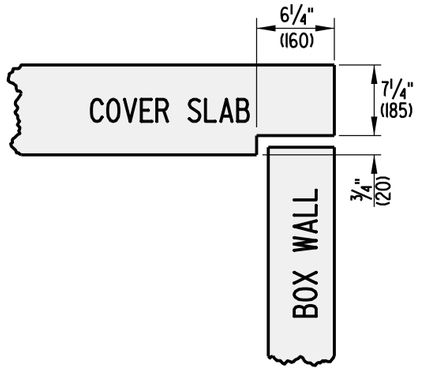

TYPE 3 JOINT DETAIL

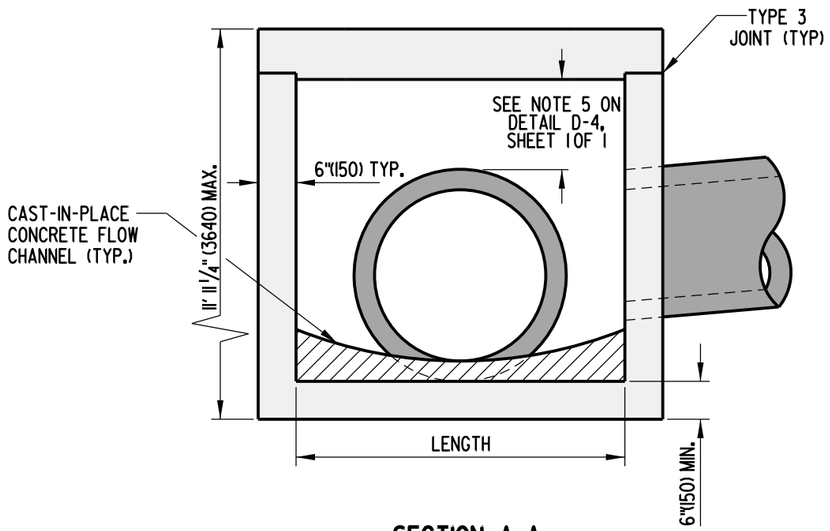

SECTION A-A

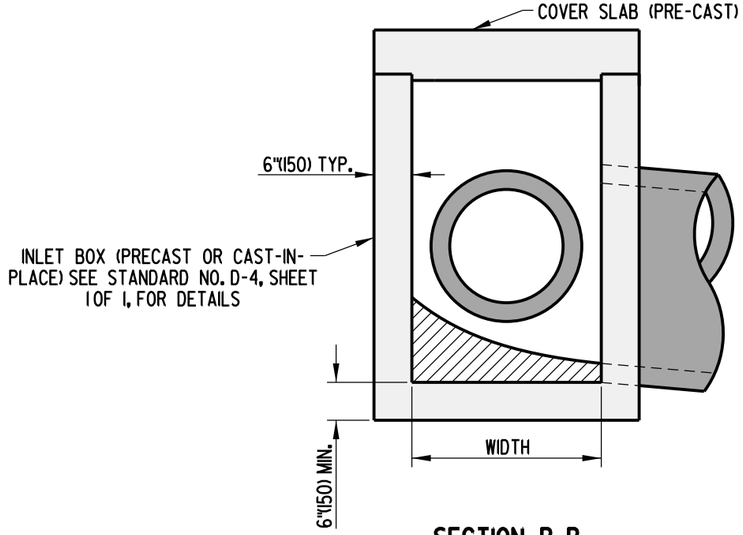

SECTION B-B

• - SEE OPTIONAL PIPE OPENING DETAIL ON STANDARD NO. D-4, SHEET 1 OF 1.

JUNCTION BOX ASSEMBLY

DELAWARE DEPARTMENT OF TRANSPORTATION	JUNCTION BOX DETAILS	APPROVED SIGNATURE ON FILE (CHIEF ENGINEER) 01/19/2010 (DATE)
	STANDARD NO. D-7 (2009) — SHT. 1 OF 2	RECOMMENDED SIGNATURE ON FILE (DESIGN ENGINEER) 01/14/2010 (DATE)

10/20/2009

SCALE : N.T.S.

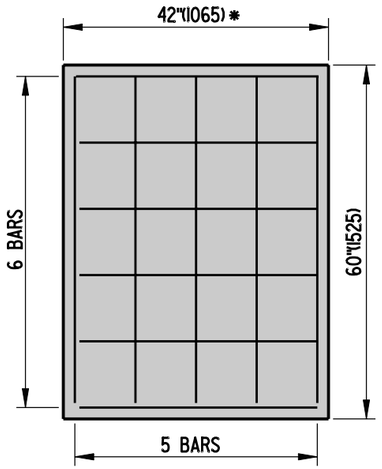

48" (1220) x 30" (760)
JUNCTION BOX

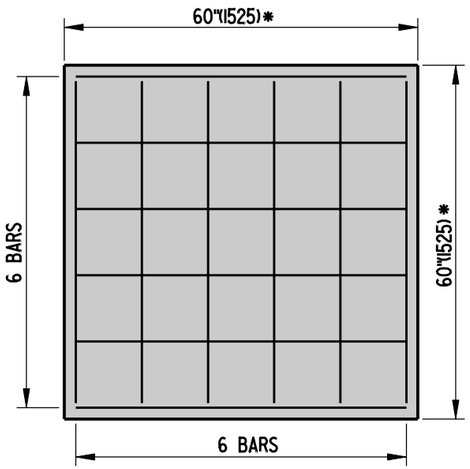

48" (1220) x 48" (1220)
JUNCTION BOX

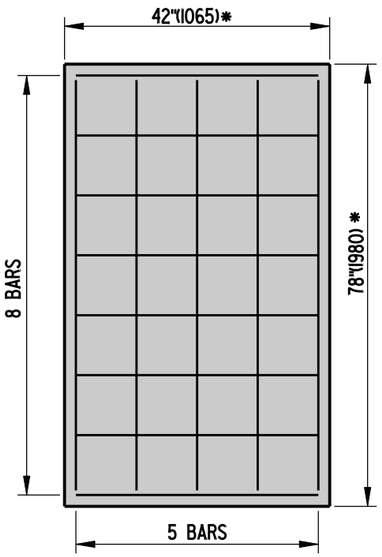

66" (1675) x 30" (760)
JUNCTION BOX

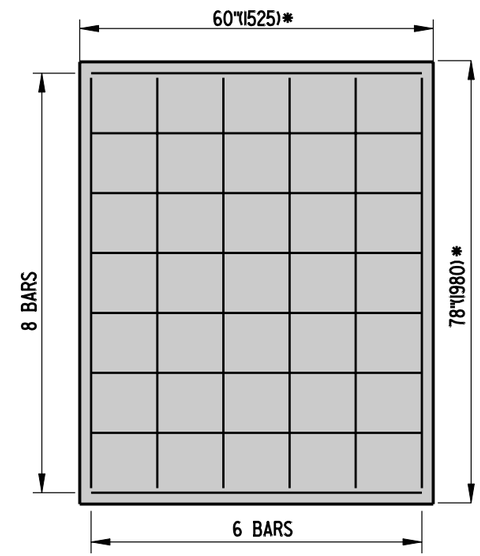

66" (1675) x 48" (1220)
JUNCTION BOX

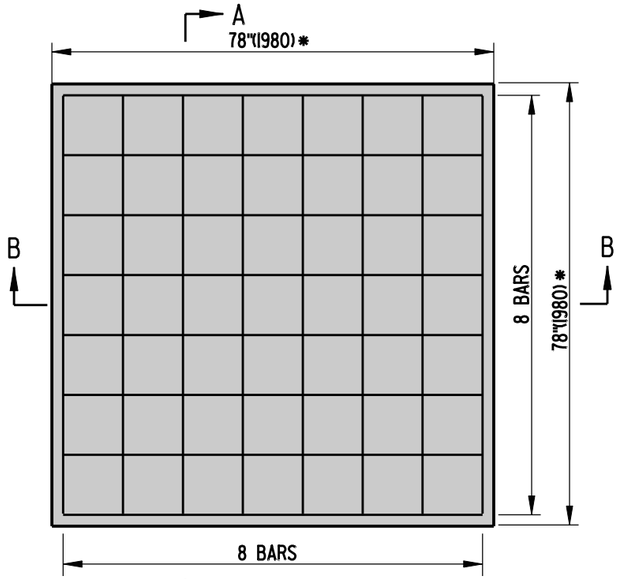

66" (1675) x 66" (1675)
JUNCTION BOX

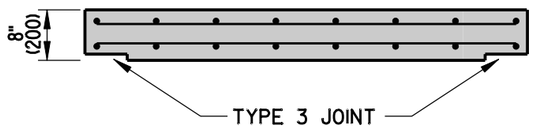

SECTION A-A

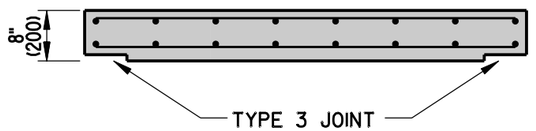

SECTON B-B

JUNCTION BOX COVER SLAB DETAILS

NOTES:

1. COVER SLABS ARE TO BE PRE-CAST.
2. ALL BARS ARE TO BE #5 (#16) SPACED @ 12" (305) ± UNLESS NOTED OTHERWISE.
3. MINIMUM BAR COVER = 1½" (38).
* - DIMENSIONS TO MATCH OUTSIDE TO OUTSIDE DIMENSIONS OF BOX.

DELAWARE
DEPARTMENT OF TRANSPORTATION

JUNCTION BOX DETAILS

STANDARD NO. D-7 (2007) | SHT. 2 OF 2

APPROVED _____ CHIEF ENGINEER 10/24/07 DATE

RECOMMENDED _____ DESIGN ENGINEER 10/23/07 DATE

08/01/2007

SCALE : N.T.S.

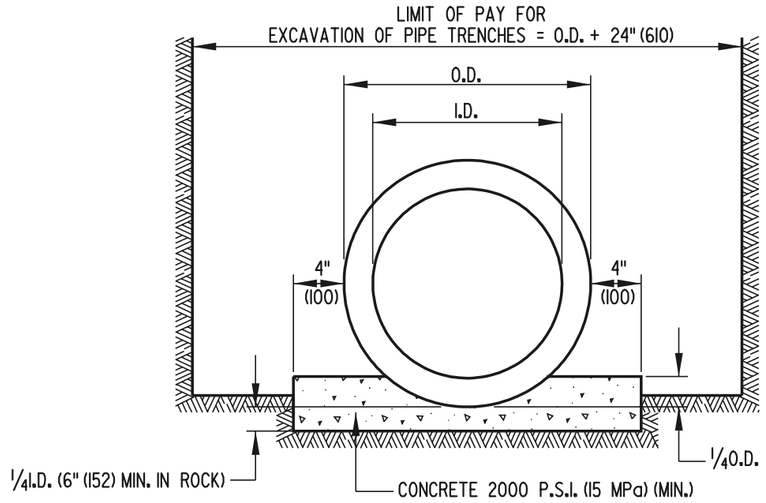

CLASS A BEDDING

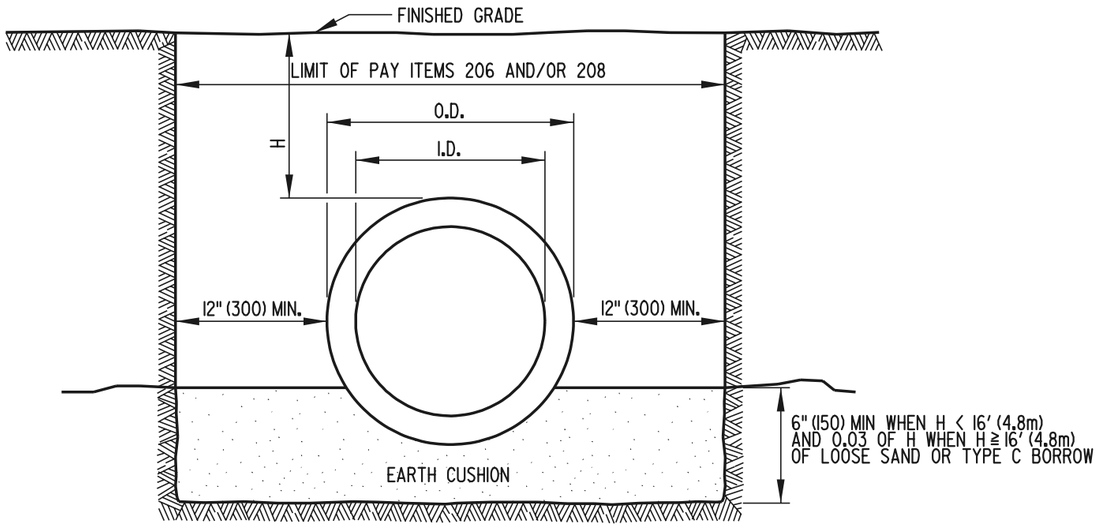

CLASS C BEDDING

NOTE: USE CLASS C BEDDING UNLESS OTHERWISE INDICATED

DELAWARE DEPARTMENT OF TRANSPORTATION	PIPE BEDDING		APPROVED Lynne M. Harbeson CHIEF ENGINEER 6/18/01 DATE
	STANDARD NO. D-8 (2001)	SHT. 1 OF 1	RECOMMENDED Michael A. Hyatt DESIGN ENGINEER 6/15/01 DATE

05/30/2001

SCALE : N.T.S.

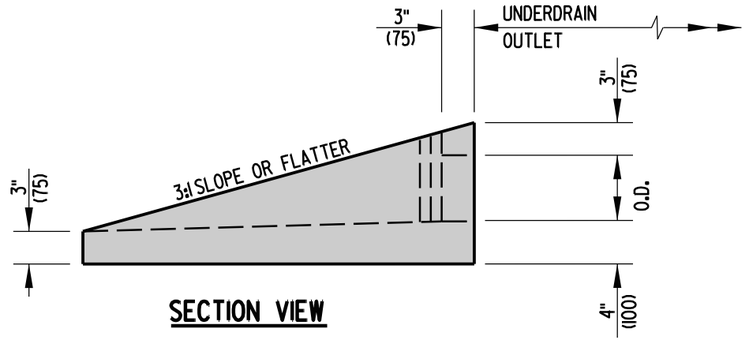

SECTION VIEW

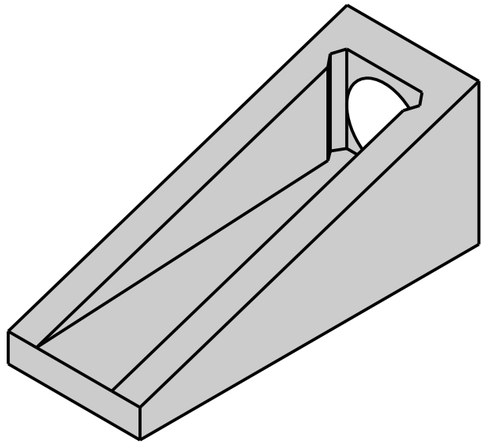

ISOMETRIC VIEW

UNDERDRAIN OUTLET

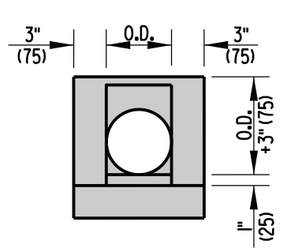

FRONT VIEW

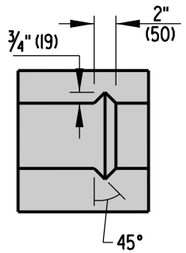

TOP VIEW

SLOTTED HEADWALL DETAIL

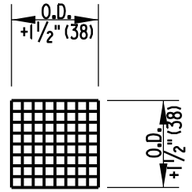

FRONT VIEW

RODENT SCREEN

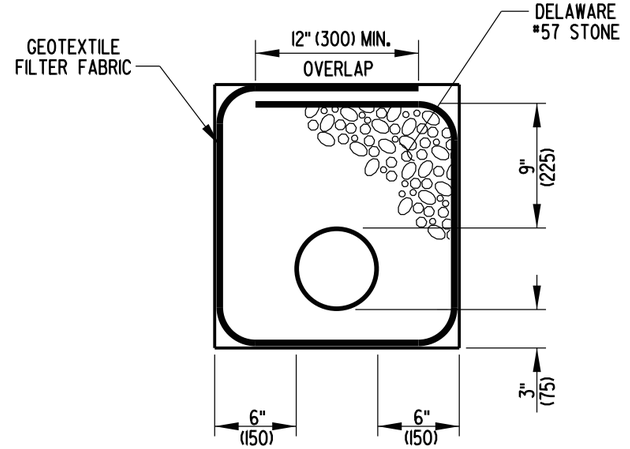

SECTION

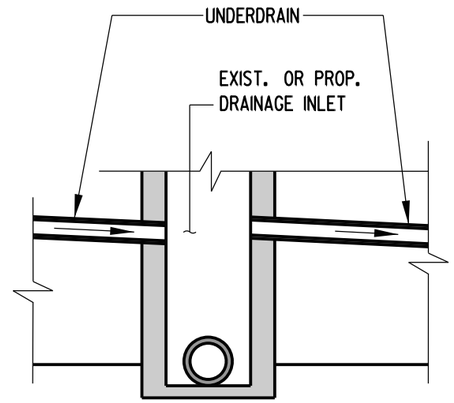

ELEVATION

PERFORATED PIPE UNDERDRAIN

NOTES:

1). THE PERFORATED PIPE UNDERDRAIN SHALL BE LOCATED AS SHOWN ON THE TYPICAL SECTIONS OF THE CONSTRUCTION PLANS.
2). GEOTEXTILE FILTER FABRIC SHALL BE PLACED ENTIRELY OVER THE TOP OF UNDERDRAIN TRENCH AND LAPPED AS SHOWN.
3). SLOPE OF UNDERDRAINS SHALL MATCH ROADWAY GRADE, UNLESS OTHERWISE DIRECTED BY THE ENGINEER.
4). OUTLET PIPE CONFIGURATIONS SHALL USE 45 DEGREE ELBOWS OR SHALL USE STRAIGHT PIPE WITH A MINIMUM RADIUS OF 3' (900) TO DIRECT UNDERDRAIN PIPE INTO SIDE OF DRAINAGE INLET OR TO POSITIVE GRADE. PIPE SHALL ALSO BE NON-PERFORATED AND HAVE A SMOOTH INTERIOR.
5). RODENT SCREEN SHALL SNUGLY FIT THE PROVIDED SLOT WITH THE SCREEN LIP FITTING TIGHT TO THE BOTTOM FLOW LINE.
6). A 4' (1200) FLEXIBLE DELINEATOR SHALL BE FURNISHED AND INSTALLED AT THE DIRECTION OF THE ENGINEER TO MARK THE LOCATION OF THE CONCRETE HEADWALL.
7). WHEN TWO LINES OF PIPE UNDERDRAIN DRAIN TO A LOW POINT, EACH PIPE MUST HAVE ITS OWN OUTLET.
8). PERFORATED PIPE UNDERDRAIN SHALL NOT BE PLACED UNDER GUARDRAIL IN ORDER TO AVOID PUNCTURING.

DELAWARE DEPARTMENT OF TRANSPORTATION	PERFORATED PIPE UNDERDRAIN DETAIL		APPROVED CHIEF ENGINEER — DATE 11/18/08
	STANDARD NO. D-9 (2008)	SHT. 1 OF 1	RECOMMENDED DESIGN ENGINEER — DATE 11/17/08

10/23/2008

SCALE : N.T.S.

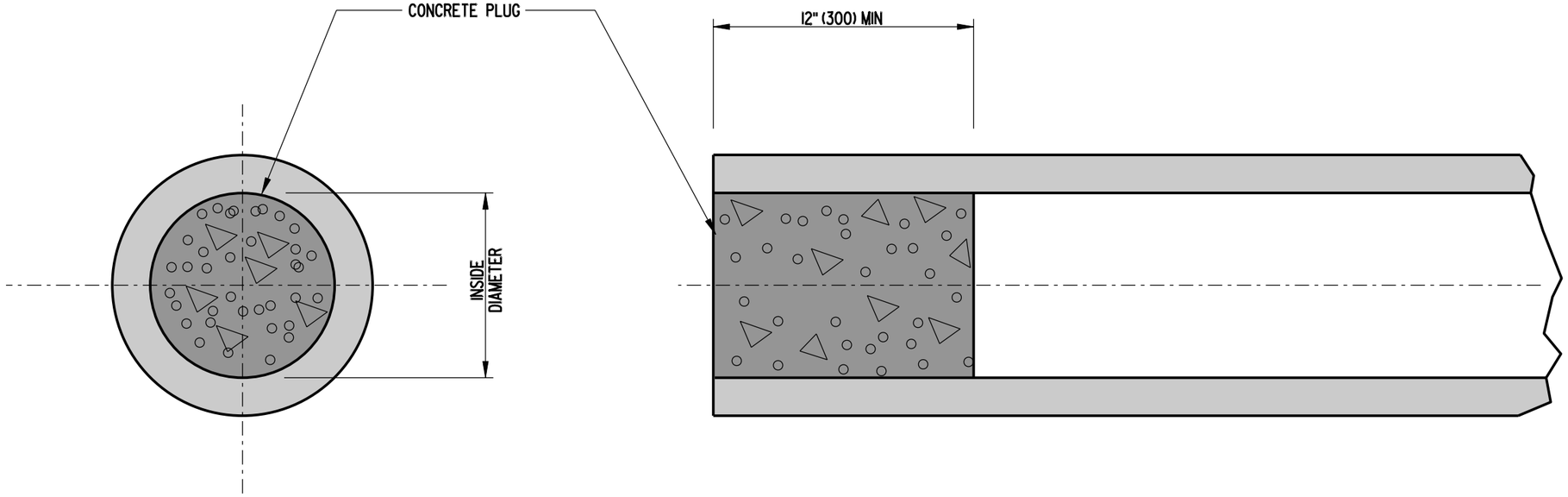

SECTION

ELEVATION

NOTE:
THE CONTRACTOR SHALL FURNISH MATERIAL AND PLUG ABANDONED DRAINAGE PIPES WITH CONCRETE AS DIRECTED BY THE ENGINEER.

DELAWARE DEPARTMENT OF TRANSPORTATION	PIPE PLUGGING DETAIL		APPROVED CHIEF ENGINEER 10/24/07 DATE
	STANDARD NO. D-10 (2007)	SHT. 1 OF 1	RECOMMENDED DESIGN ENGINEER 10/23/07 DATE

04/17/2007

SCALE : N.T.S.

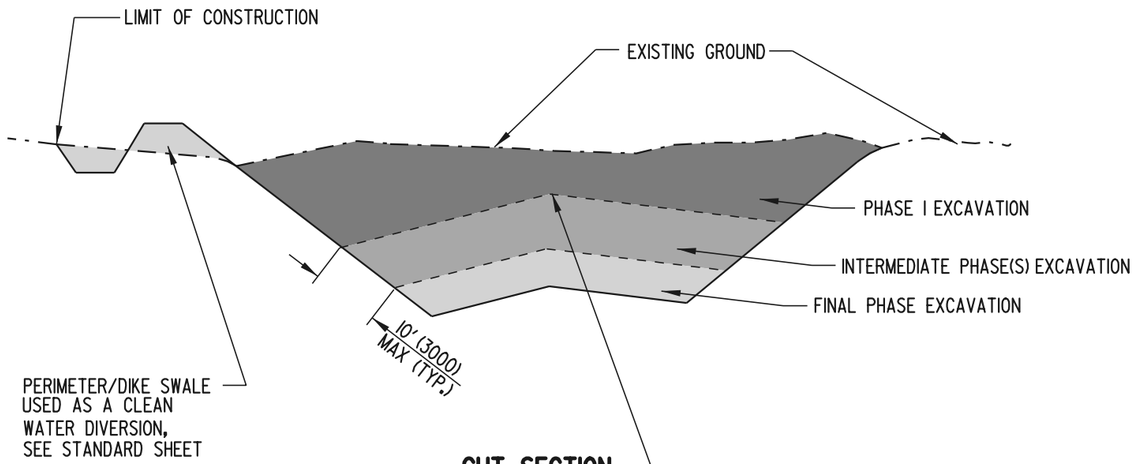

CUT SECTION

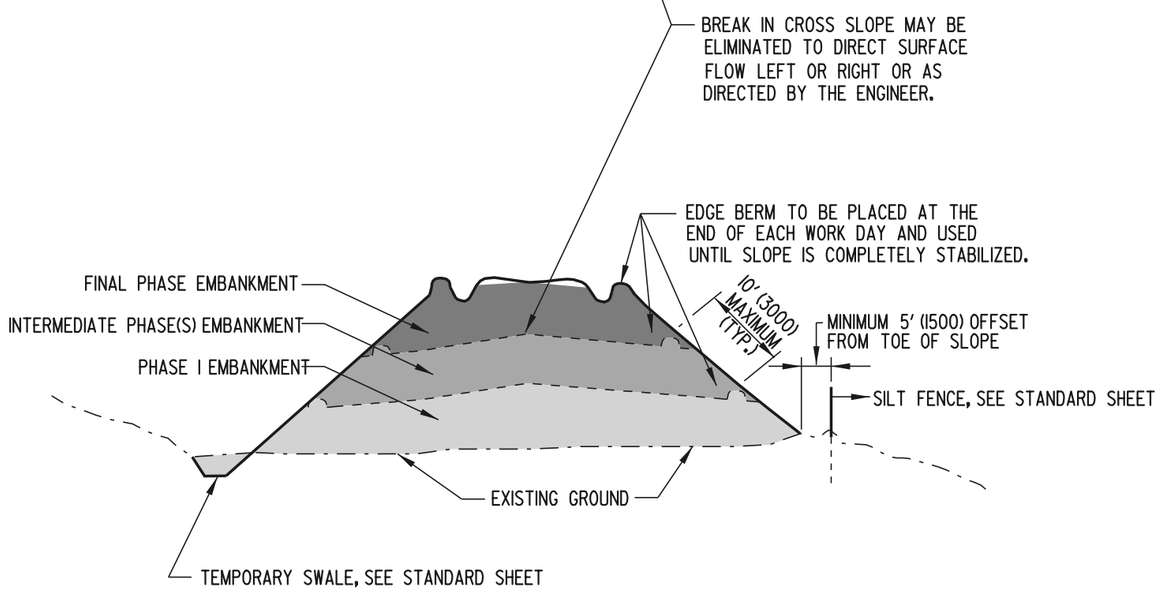

FILL SECTION

NOTES: 1.) EDGE BERMS AND TEMPORARY SLOPE DRAINS SHALL BE CONSTRUCTED ALONG THE TOP OF ALL SLOPES TO INTERCEPT RUNOFF AND CONVEY IT DOWN THE SLOPE FACES WITHOUT CREATING GULLIES OR WASHOUTS.

2.) SLOPE FACES SHALL BE TRACKED WITH CLEATED EQUIPMENT SUCH THAT THE CLEAT MARKS ARE ORIENTED HORIZONTALLY.

3.) ALL CUT AND FILL SLOPES OF THE HIGHWAY EMBANKMENT SHALL BE PERMANENTLY STABILIZED AS THE WORK PROGRESSES IN INCREMENTS NOT TO EXCEED 10' (3000) MEASURED ALONG THE SLOPE.

4.) CROSS SLOPES SHALL BE 2% MINIMUM, 6% MAXIMUM.

DELAWARE DEPARTMENT OF TRANSPORTATION	INCREMENTAL STABILIZATION		APPROVED [signature] CHIEF ENGINEER 6/18/01 DATE
	STANDARD NO. E-1 (2001)	SHT. 1 OF 1	RECOMMENDED [signature] DESIGN ENGINEER 6/15/01 DATE

05/30/2001

SCALE : N.T.S.

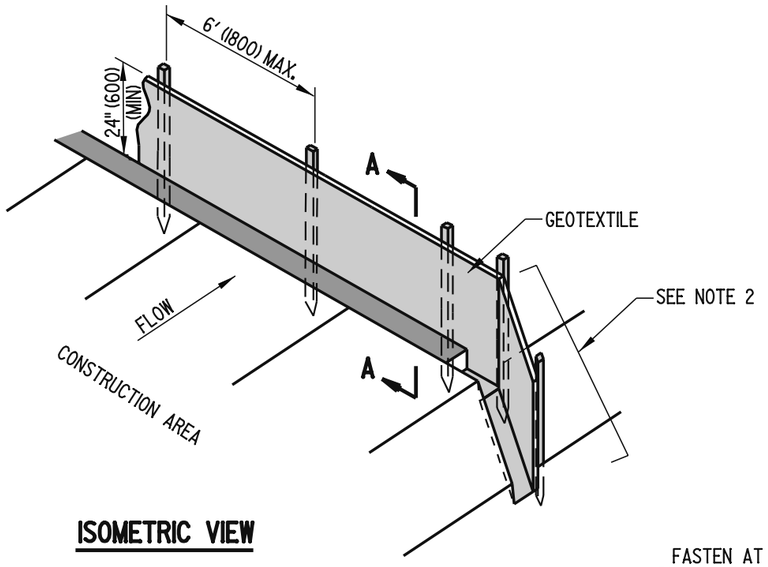

ISOMETRIC VIEW

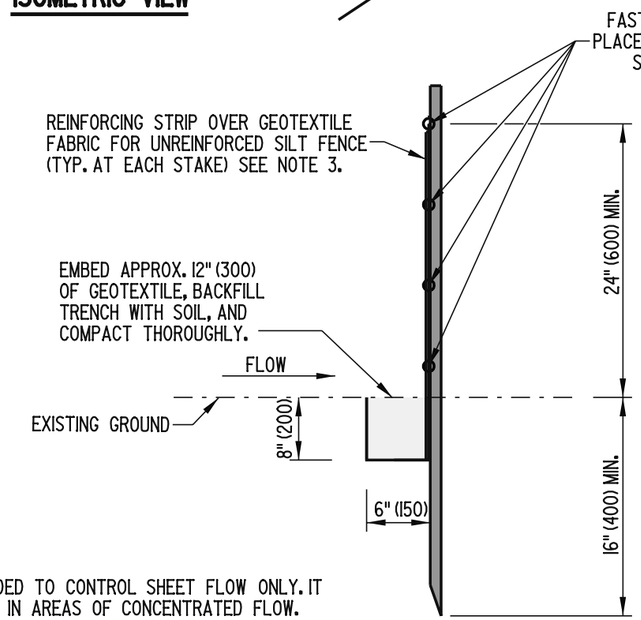

NOTES:

1). THIS DEVICE IS INTENDED TO CONTROL SHEET FLOW ONLY. IT SHALL NOT BE USED IN AREAS OF CONCENTRATED FLOW.
2). SILT FENCE ENDS SHALL BE TURNED UPSLOPE TO CONTAIN RUNOFF.
3). REINFORCING STRIP IS TO BE ONE COMPLETE STRIP COVERING ALL GEOTEXTILE FABRIC AT POST.

SECTION A-A

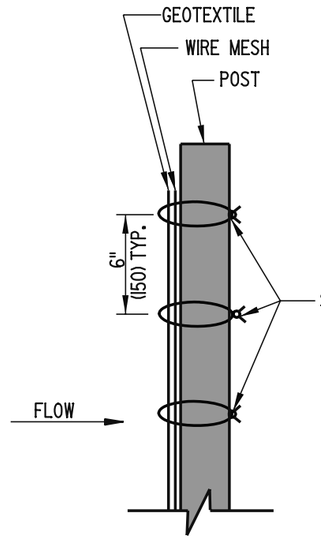

SECTION B-B

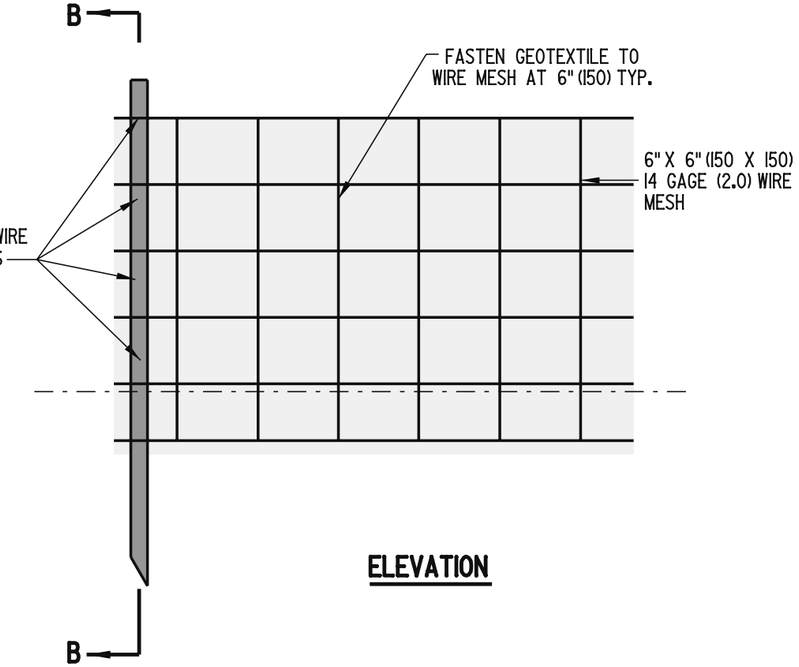

ELEVATION

WIRE MESH DETAIL
(REINFORCED SILT FENCE ONLY)

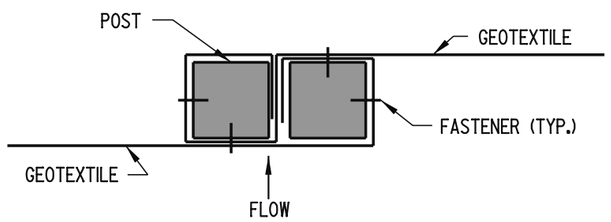

UNREINFORCED SILT FENCE CONNECTON DETAIL

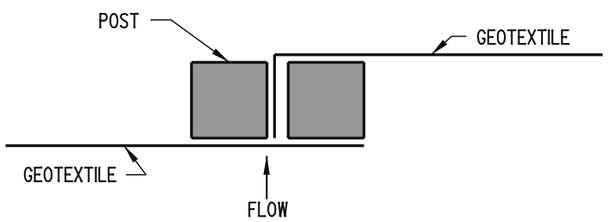

REINFORCED SILT FENCE CONNECTON DETAIL

DELAWARE
DEPARTMENT OF TRANSPORTATION

SILT FENCE

STANDARD NO. E-2 (2006) | SHT. 1 OF 1

APPROVED _____ CHIEF ENGINEER DATE 10/10/06

RECOMMENDED _____ DESIGN ENGINEER DATE 10/9/06

10/02/2006

SCALE : N.T.S.

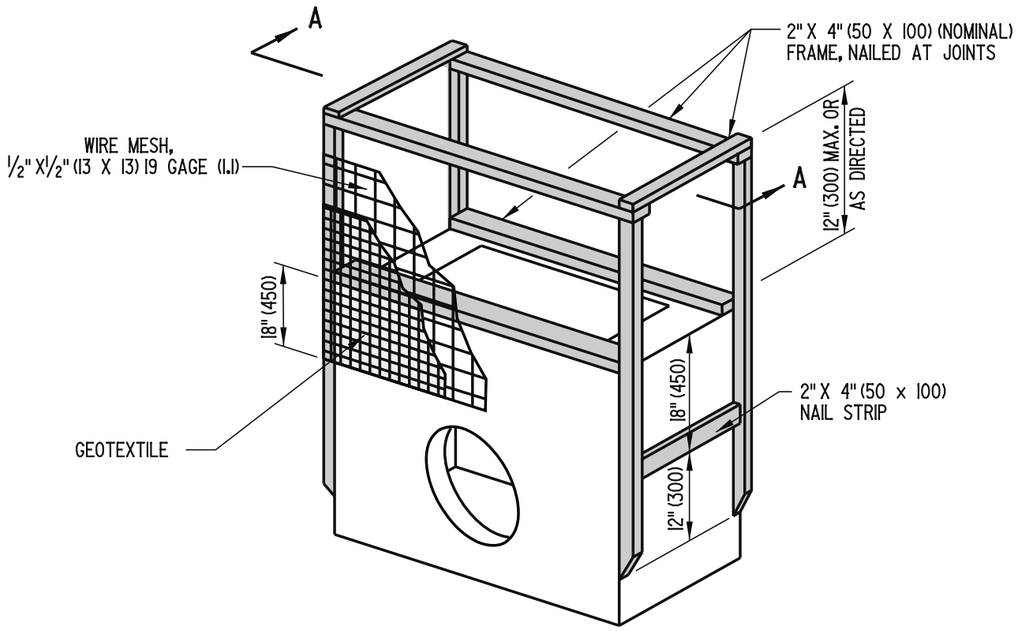

ISOMETRIC VIEW

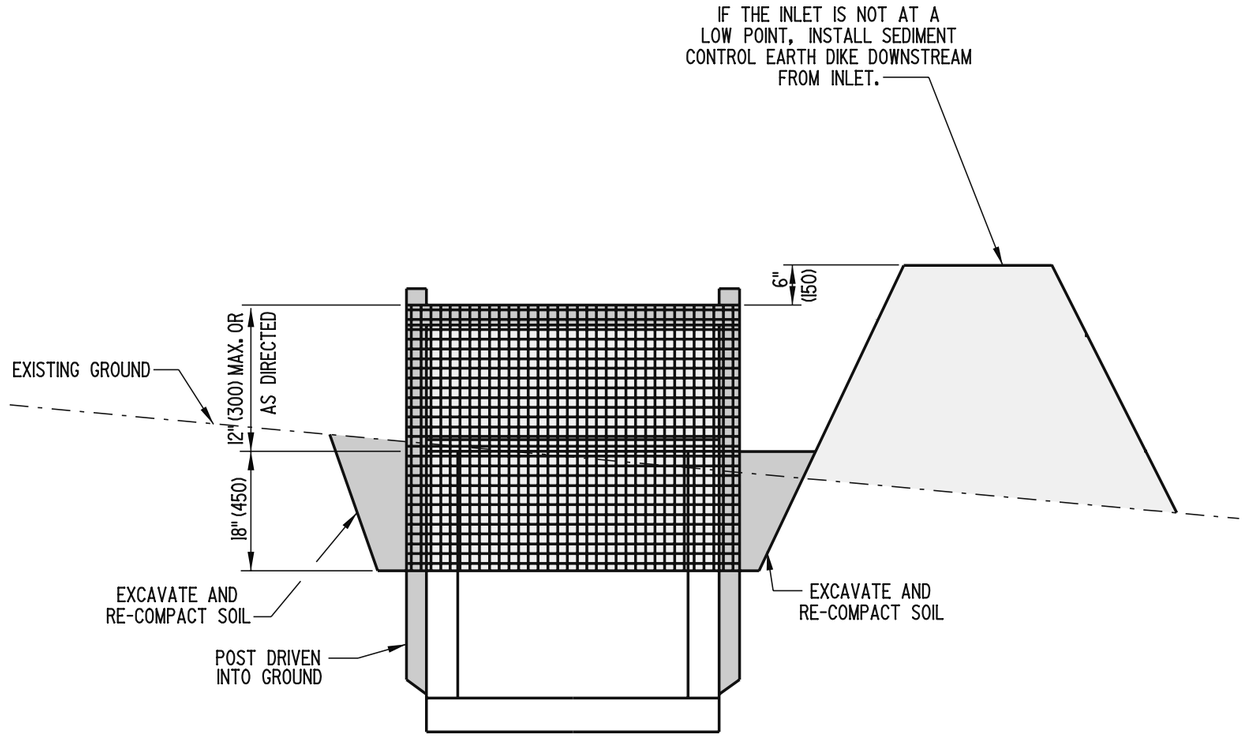

SECTION A-A

DELAWARE DEPARTMENT OF TRANSPORTATION	DRAINAGE INLET SEDIMENT CONTROL		APPROVED Carolann Wicks CHIEF ENGINEER 12/5/05 DATE
	STANDARD NO. E-3 (2005)	SHT. 1 OF 1	RECOMMENDED DESIGN ENGINEER 11/29/05 DATE

01/19/2006

SCALE : N.T.S.

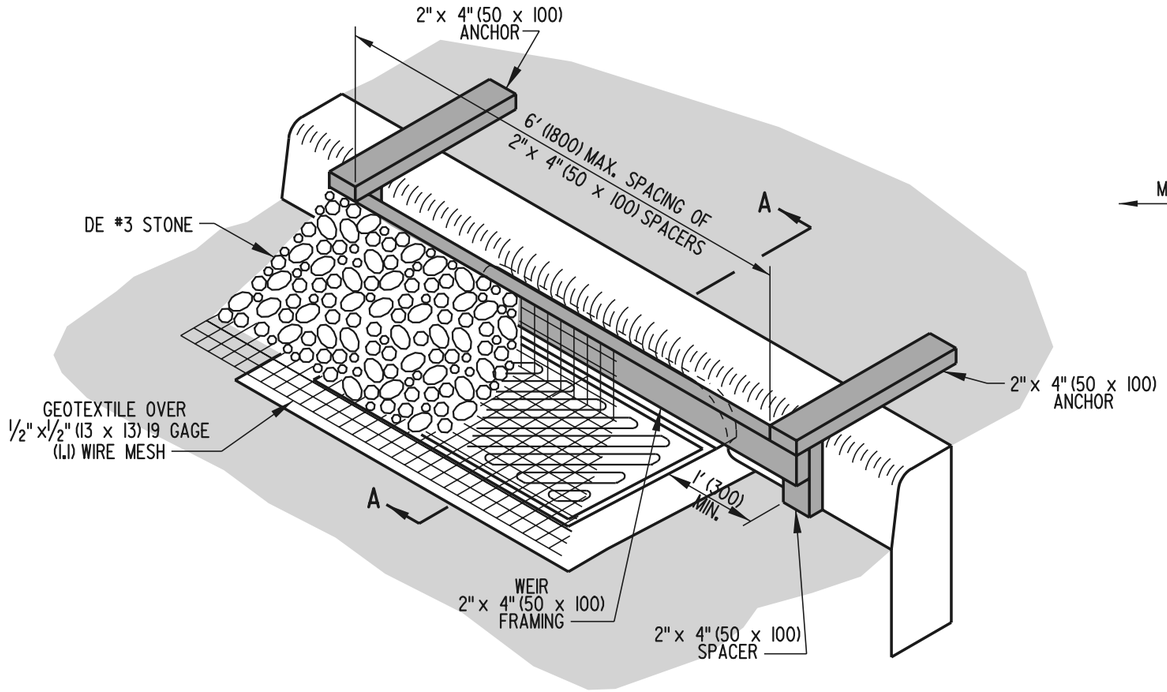

ISOMETRIC VIEW

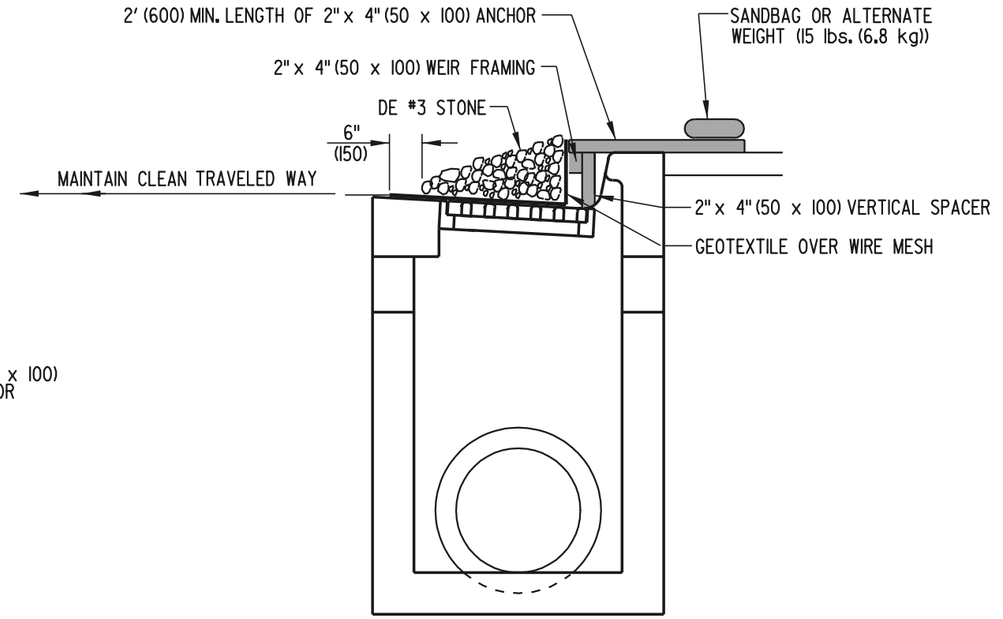

SECTION A-A

PLAN SYMBOL

DELAWARE DEPARTMENT OF TRANSPORTATION	CURB INLET SEDIMENT CONTROL		APPROVED [signature] CHIEF ENGINEER 6/18/01 DATE
	STANDARD NO. E-4 (2001)	SHT. 1 OF 1	RECOMMENDED [signature] DESIGN ENGINEER 6/15/01 DATE

05/21/2001

SCALE : N.T.S.

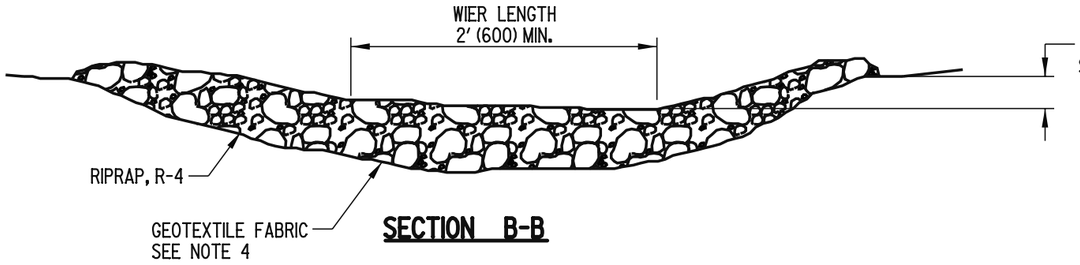

SECTION B-B

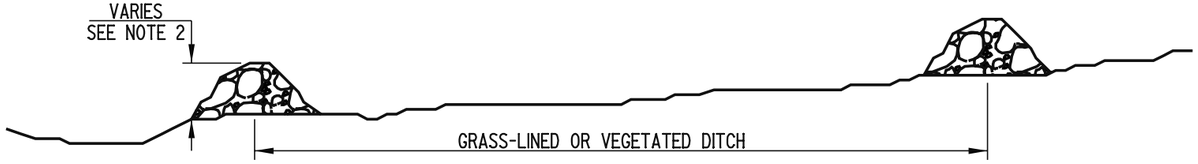

SECTION A-A

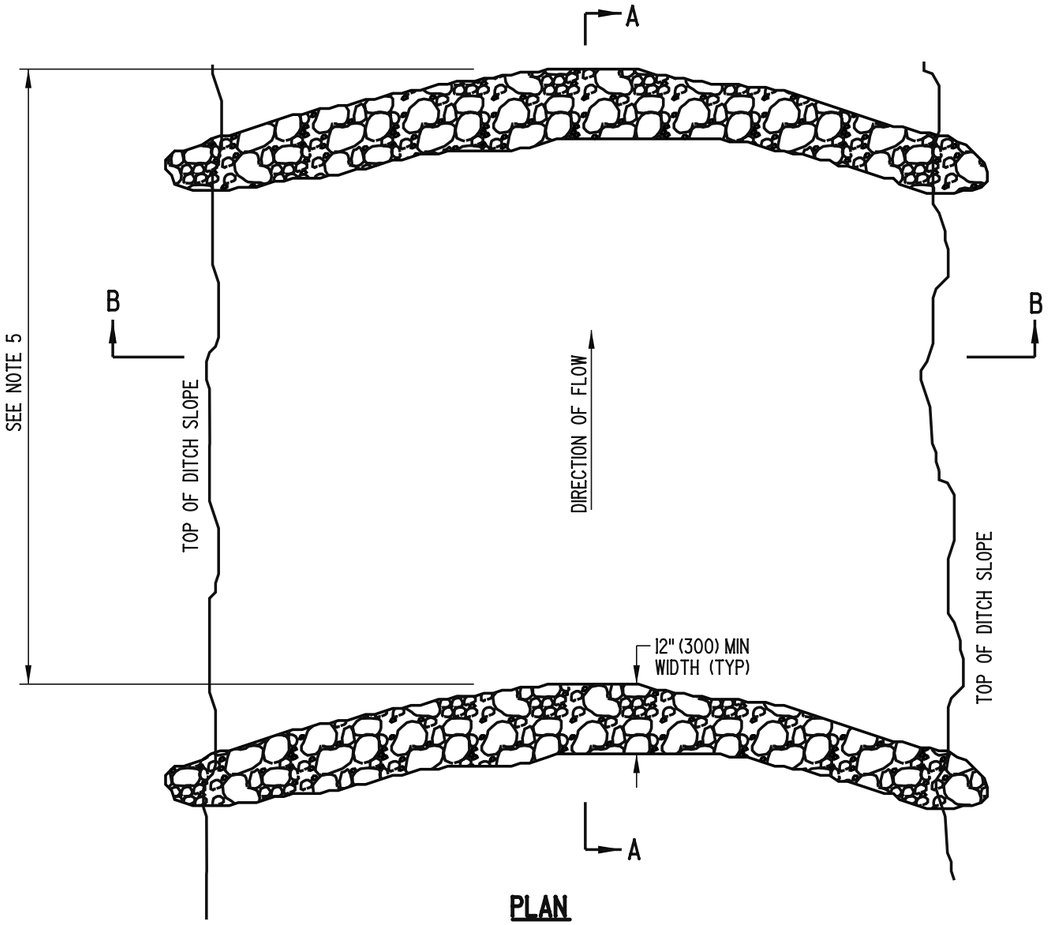

PLAN

NOTES:

1). FOR DITCHES LESS THAN 30" (750) IN DEPTH, PLACE DAM AS DIRECTED BY THE ENGINEER.
2). THE CHECK DAM HEIGHT MUST NOT EXCEED 2' (600) AT THE CENTER OF THE WEIR.
3). THE CHECK DAM IS TO BE CONSTRUCTED SO THAT THE CENTER IS 6" (150) MIN. LOWER THAN THE OUTER EDGES, FORMING A WEIR THAT WATER CAN FLOW ACROSS.
4). GEOTEXTILE FABRIC IS TO BE INSTALLED UNDERNEATH RIPRAP ON PERMANENT CHECK DAMS ONLY.
5). THE MAXIMUM SPACING BETWEEN DAMS SHALL BE THE DISTANCE IN THE DITCH WHERE THE TOE OF THE UPSTREAM DAM IS AT THE SAME ELEVATION AS THE TOP OF THE DOWNSTREAM DAM AT THE CENTER OF THE WEIR.

DELAWARE DEPARTMENT OF TRANSPORTATION	STONE CHECK DAM		APPROVED CHIEF ENGINEER	DATE 10/10/06
	STANDARD NO. E-5 (2006)	SHT. 1 OF 1	RECOMMENDED DESIGN ENGINEER	DATE 10/3/06

08/14/2006

SCALE : N.T.S.

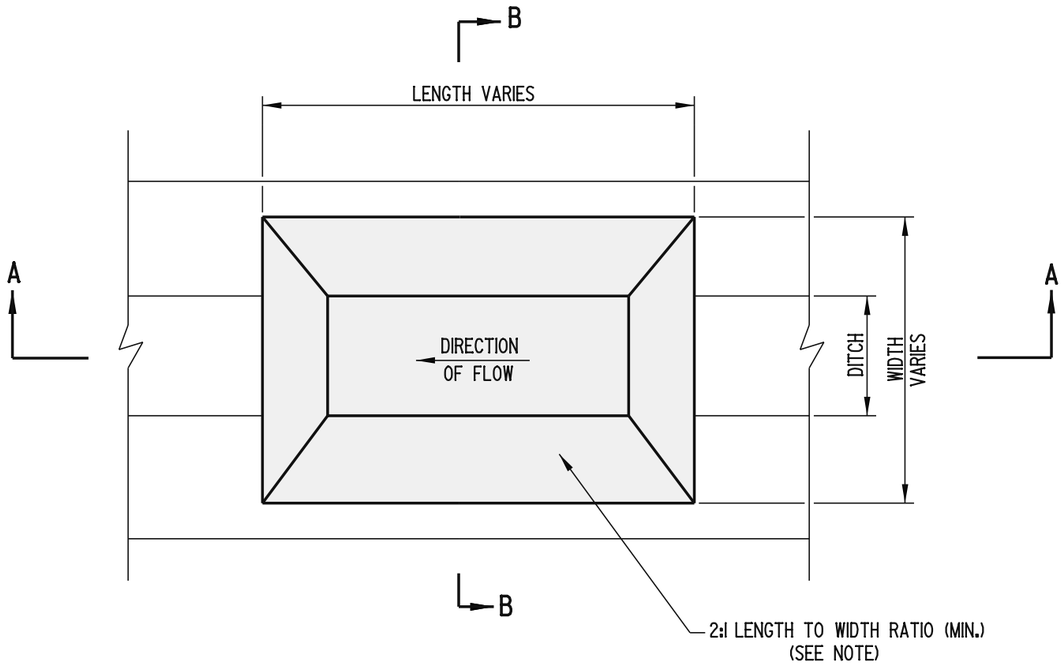

PLAN

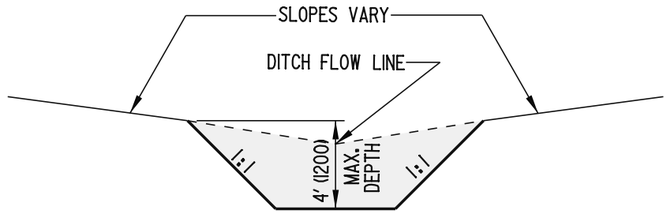

SECTION B-B

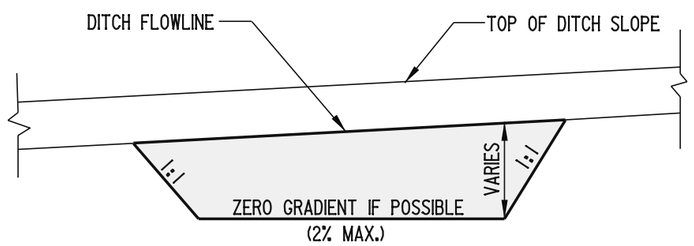

SECTION A-A

NOTES: 1). SEDIMENT TRAPS ARE INTENDED FOR USE IN EXISTING, PROPOSED, AND TEMPORARY DITCHES OF ALL TYPES WITH A MAXIMUM DRAINAGE AREA OF 15 ACRES (6 HECTARES), AS SHOWN ON PLANS OR AS DIRECTED BY THE ENGINEER.

2). SIDE SLOPES SHALL BE STABILIZED WITH "TEMPORARY GRASS SEEDING, DRY GROUND" AND STRAW MULCH.

3). AN OUTLET STRUCTURE IS REQUIRED. STONE CHECK DAMS, PERFORATED RISER PIPES, SKIMMER DEWATERING DEVICES, OR DRAINAGE INLETS MAY BE USED. SEE APPROPRIATE STANDARD SHEET FOR ADDITIONAL INFORMATION.

4). FOR SIZE, LOCATION, ETC. OF SEDIMENT TRAP, SEE CONSTRUCTION PHASING, M.O.T., AND EROSION CONTROL PLANS.

5). ALL FILL SLOPES SHALL BE 2:1.

6). A 2:1 LENGTH TO WIDTH RATIO SHOULD BE ACHIEVED WHERE POSSIBLE. IF THIS IS NOT POSSIBLE, THE USE OF BAFFLES OR OTHER SPECIAL DESIGNS SHOULD BE INCORPORATED TO INCREASE FLOW TIME.

DELAWARE DEPARTMENT OF TRANSPORTATION	SEDIMENT TRAP		APPROVED Carolann Wicks CHIEF ENGINEER 12/5/05 DATE
	STANDARD NO. E-6 (2005)	SHT. 1 OF 1	RECOMMENDED DESIGN ENGINEER 11/29/05 DATE

08/19/2005

SCALE : N.T.S.

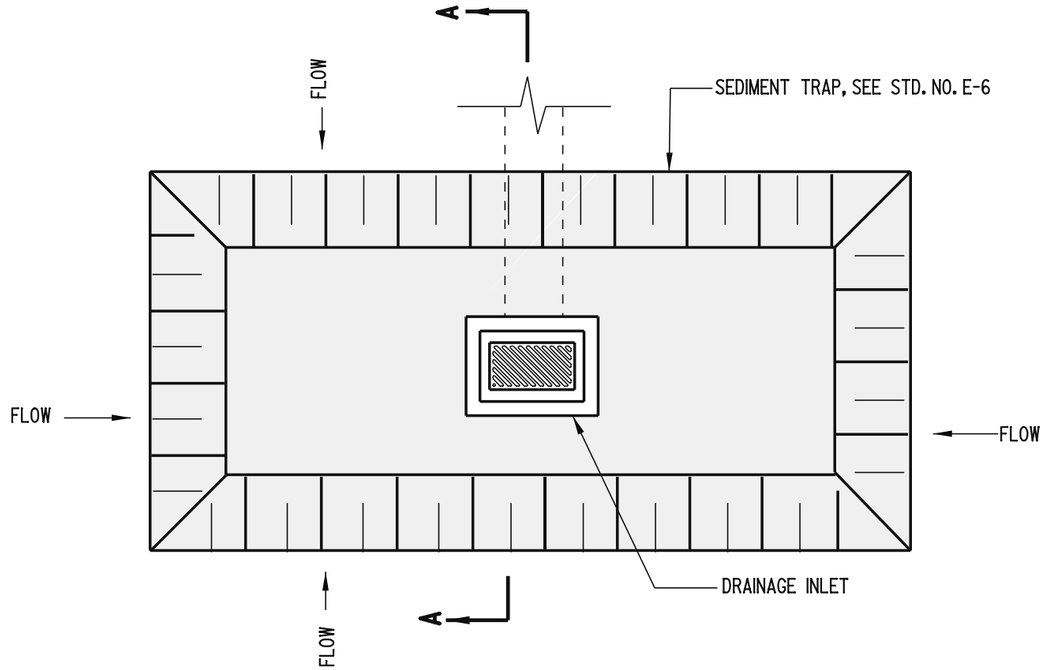

PLAN

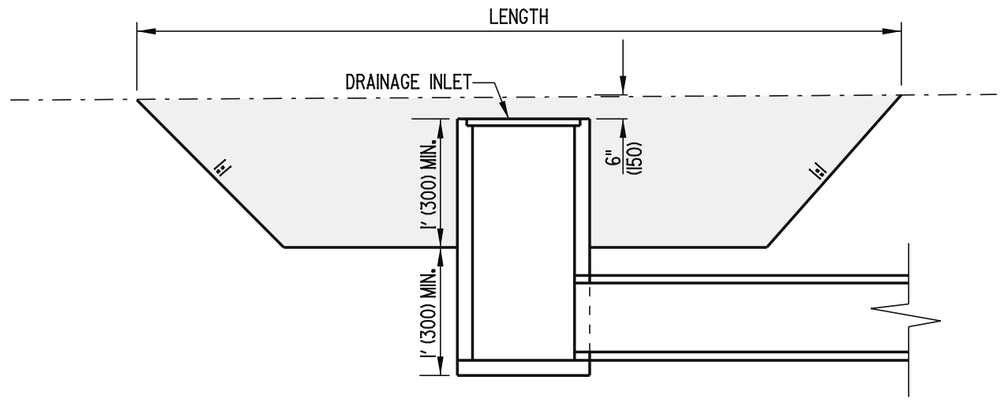

SECTION A-A

NOTES: 1). THE WORK SHALL CONSIST OF THE CONSTRUCTION OF A SEDIMENT TRAP AROUND A DRAINAGE INLET TO ALLOW SEDIMENTATION TO OCCUR BEFORE RUNOFF ENTERS THE DRAINAGE INLET.

2). DRAINAGE INLET SEDIMENT TRAPS SHALL BE LIMITED TO A THREE (3) ACRE (1.2 HECTRARE) MAXIMUM DRAINAGE AREA.

3). THE DIMENSIONS OF THE DRAINAGE INLET SEDIMENT TRAP ARE TO BE AS INDICATED ON THE PLANS OR AS DIRECTED BY THE ENGINEER.

DELAWARE DEPARTMENT OF TRANSPORTATION	SEDIMENT TRAP, USING DRAINAGE INLET AS OUTLET		APPROVED Carolann Wicks CHIEF ENGINEER 12/5/05 DATE
	STANDARD NO. E-7 (2005)	SHT. 1 OF 1	RECOMMENDED James M. Oiffer DESIGN ENGINEER 11/29/05 DATE

01/19/2006

SCALE : N.T.S.

MIN. ✳ OUTFALL PIPE DIA.	MIN. RISER DIA.	MAX. DRAINAGE AREA ACRES (ha)
12" (300)	15" (375)	1 (0.4)
15" (375)	18" (450)	2 (0.8)
18" (450)	21" (525)	3 (1.2)
21" (525)	24" (600)	4 (1.6)
24" (600)	27" (675)	5 (2.0)

✳ OUTFALL PIPE DIAMETER MAY BE SAME SIZE AS RISER DIAMETER.

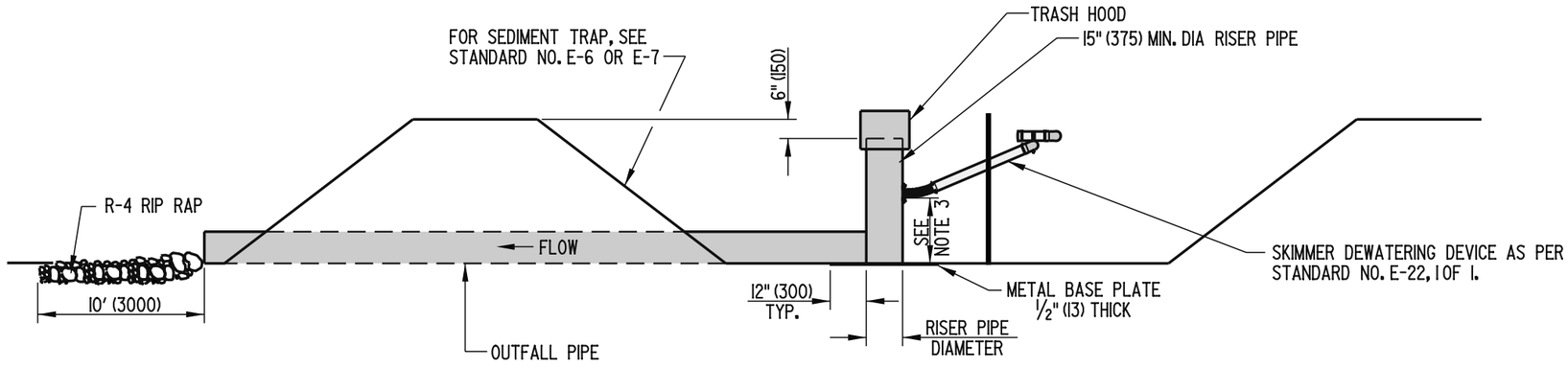

ELEVATION

NOTES:

1). THIS DEVICE IS INTENDED TO BE USED AS AN OUTLET FOR SEDIMENT TRAPS.
2). THE PIPE OUTLET SHOWN SHALL ONLY BE USED WITH SEDIMENT TRAPS WITH DRAINAGE AREAS OF 5 ACRES (2.0 HECTARES) OR LESS. LARGER DRAINAGE AREAS REQUIRE AN ENGINEERED DESIGN.
3). THE HEIGHT OF THE SKIMMER DEWATERING DEVICE SHALL BE SPECIFIED BY THE ENGINEER IN THE FIELD.

DELAWARE
DEPARTMENT OF TRANSPORTATION

RISER PIPE ASSEMBLY FOR SEDIMENT TRAP

STANDARD NO. E-8 (2006) | SHT. 1 OF 2

APPROVED _____ CHIEF ENGINEER DATE 10/10/06

RECOMMENDED _____ DESIGN ENGINEER DATE 10/9/06

10/02/2006

SCALE : N.T.S.

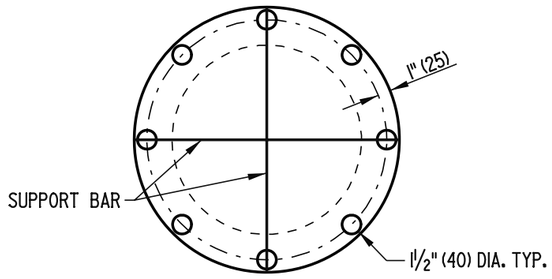

PLAN

TRASH HOOD CHART					
RISER PIPE DIAMETER	D	H	TRASH HOOD THICK. (GAGE)	MINIMUM SIZE SUPPORT BAR	MINIMUM TOP THICK. (GAGE)
15" (375)	21" (525)	7" (175)	16 (1.6)	#6 (#19) REBAR	16 (1.6)
18" (450)	27" (675)	8" (200)	16 (1.6)	#6 (#19) REBAR	16 (1.6)
21" (525)	30" (750)	11" (275)	16 (1.6)	#6 (#19) REBAR	16 (1.6)
24" (600)	36" (900)	13" (330)	16 (1.6)	#6 (#19) REBAR	14 (2.0)
27" (675)	42" (1050)	15" (380)	16 (1.6)	#6 (#19) REBAR	14 (2.0)
36" (900)	54" (1350)	17" (430)	14 (2.0)	#8 (#25) REBAR	12 (2.7)

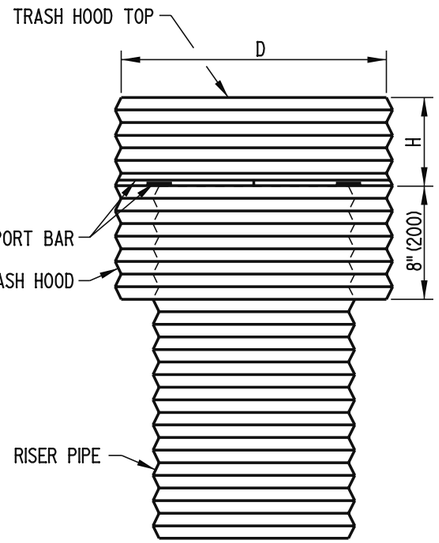

FRONT

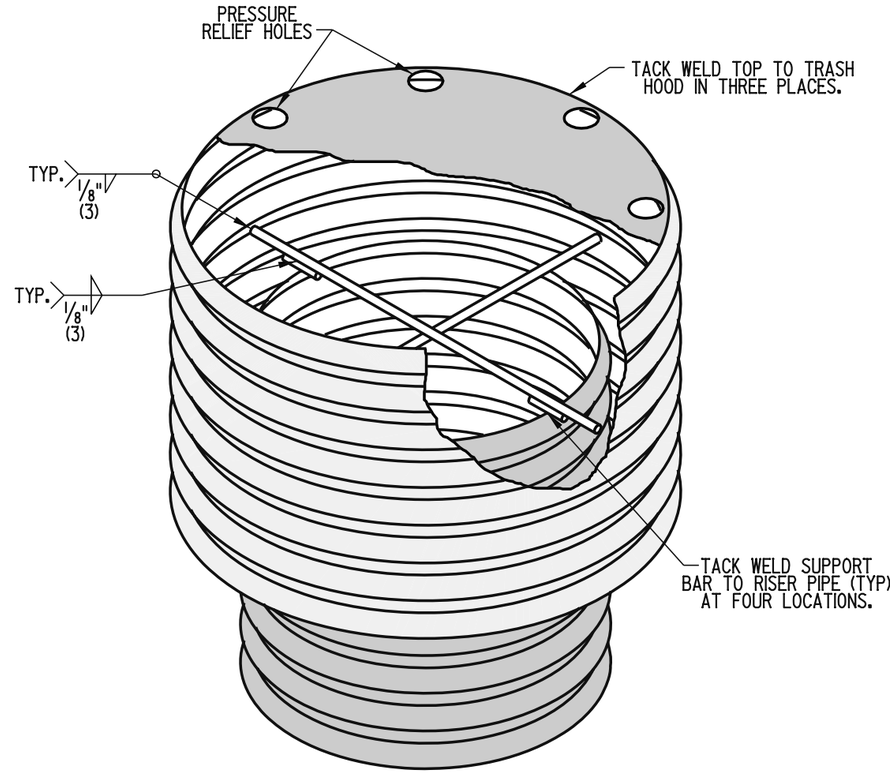

ISOMETRIC VIEW

TRASH HOOD DETAILS

DELAWARE DEPARTMENT OF TRANSPORTATION	RISER PIPE ASSEMBLY FOR SEDIMENT TRAP		APPROVED _____ CHIEF ENGINEER 10/10/06 DATE
	STANDARD NO. E-8 (2006)	SHT. 2 OF 2	RECOMMENDED _____ DESIGN ENGINEER 10/3/06 DATE

10/02/2006

SCALE : N.T.S.

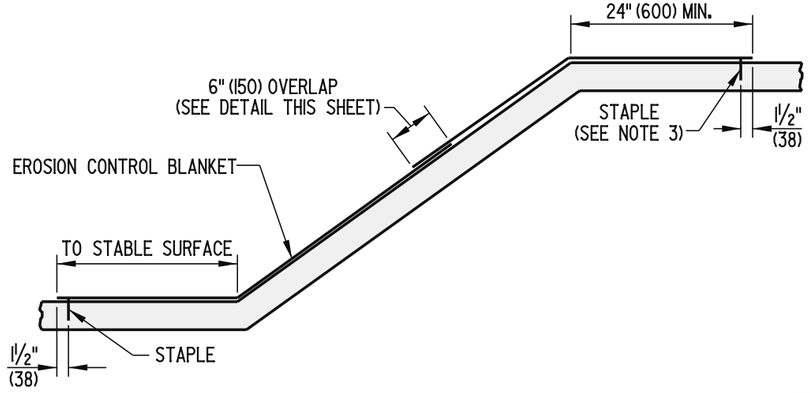

STABILIZATION OF EMBANKMENTS

NOTES:
1. STAPLES TO BE STAGGERED AT 18" (450) SPACING.
2. TOPSOIL UNDER EROSION CONTROL BLANKET IS TO BE TRACKED AND SEEDED.
3. WHEN OFFSITE RUNOFF OCCURS, ADDITIONAL MEASURES AS DIRECTED BY THE ENGINEER SHALL BE USED TO ENSURE STABILITY OF EMBANKEMENT.

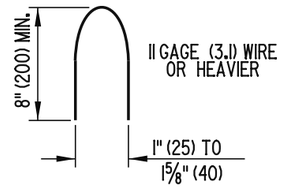

STAPLE DETAIL

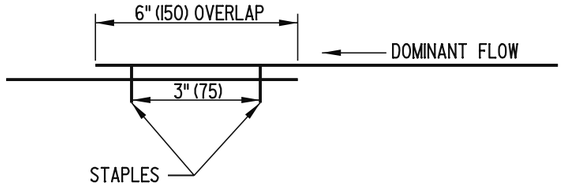

OVERLAP DETAIL

STAPLES TO BE STAGGERED AT 6" (150) SPACING.

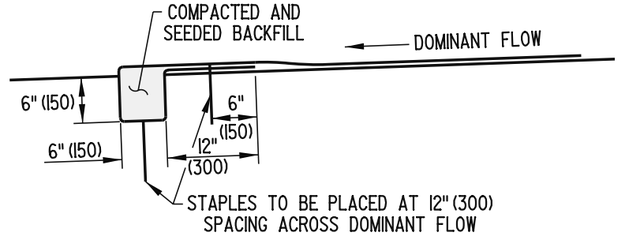

INITIAL TRENCH ANCHOR DETAIL

APPLIED AT THE DOWNSTREAM END OF DITCH

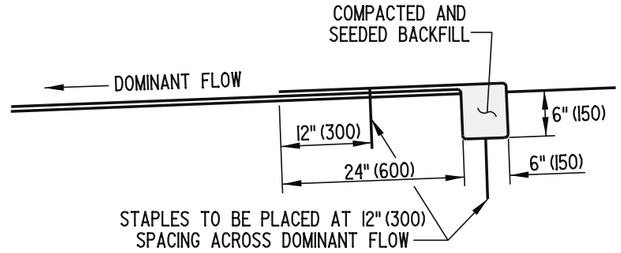

TERMINAL TRENCH ANCHOR DETAIL

APPLIED AT THE UPSTREAM END OF DITCH

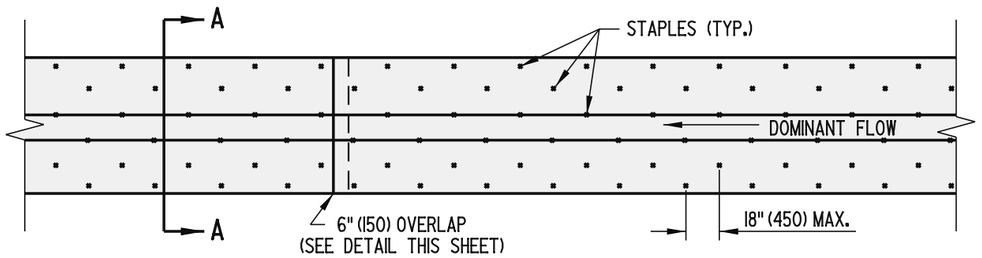

STABILIZATION OF DITCHES PLAN

NOTES:
1. ADDITIONAL STAPLES NOT SHOWN ARE REQUIRED AT OVERLAPS. SEE OVERLAP DETAIL FOR STAPLE PLACEMENT.
2. STAPLES ARE TO BE STAGGERED.
3. TOPSOIL UNDER EROSION CONTROL BLANKET IS TO BE TRACKED AND SEEDED.

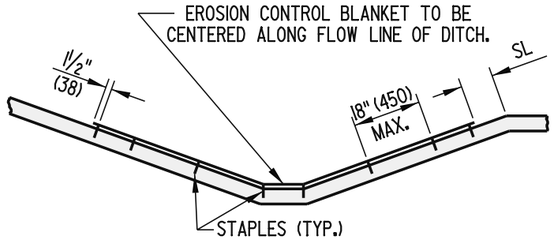

STABILIZATION OF DITCHES SECTION A-A

STAPLES ALONG LONGITUDINAL EDGES SHALL BE SPACED AS FOLLOWS:
18" (450) WHEN SL ≤ 20' (6000)
9" (225) WHEN SL > 20' (6000)

DELAWARE DEPARTMENT OF TRANSPORTATION	EROSION CONTROL BLANKET APPLICATIONS		APPROVED Carolann Wicks CHIEF ENGINEER 12/5/05 DATE
	STANDARD NO. E-9 (2005)	SHT. 1 OF 1	RECOMMENDED DESIGN ENGINEER 11/29/05 DATE

08/30/2005

SCALE : N.T.S.

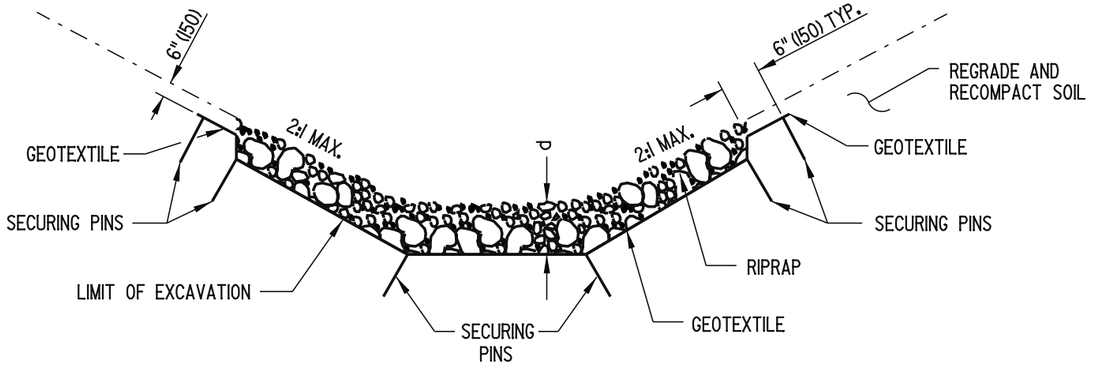

SECTION A-A

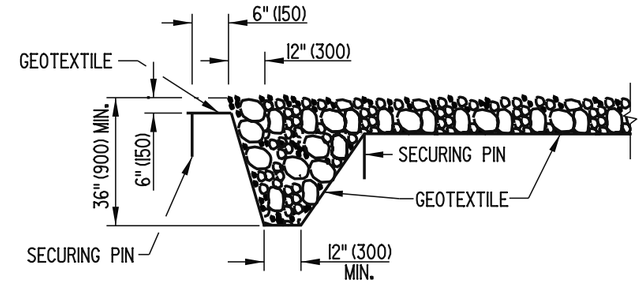

SECTION B-B

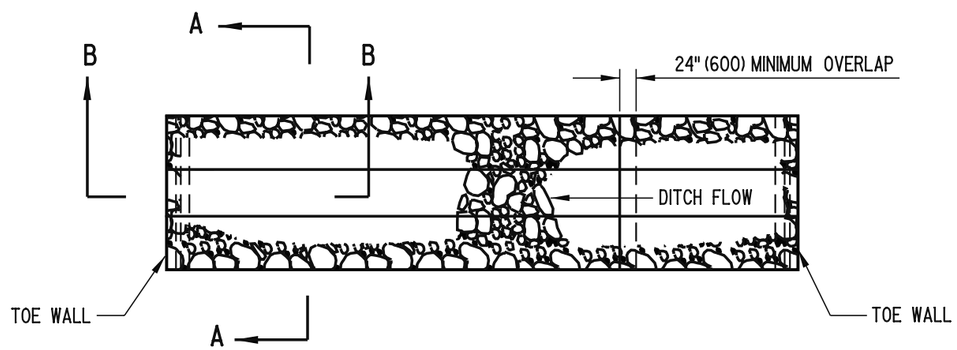

PLAN

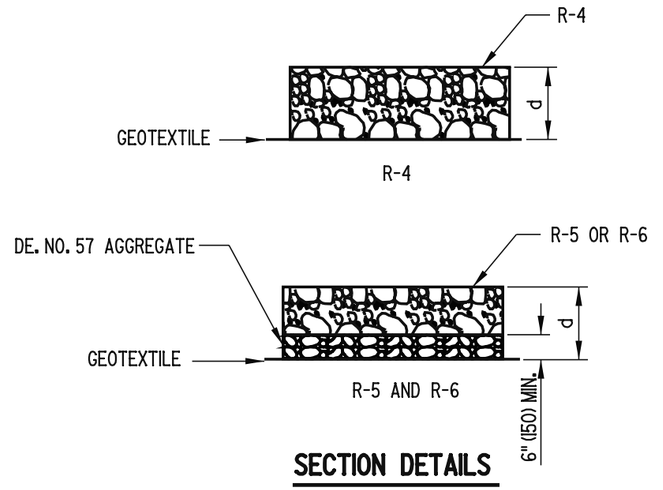

SECTION DETAILS

CLASS RIPRAP

R-4 d = 14" (350) MIN.

R-5 d = 26" (650) MIN.

R-6 d = 34" (850) MIN.

NOTES:

1). SECURING PINS ARE TO BE PLACED AT LOCATIONS SHOWN AND AT 24" (600) LONGITUDINAL AND LATERAL SPACING.

2). SEE PLANS FOR LOCATION, DIMENSIONS, GRADES, ETC.

3). USE OF R-7 RIPRAP WILL REQUIRE A SEPARATE PROFESSIONAL ENGINEERING DESIGN FOR SIGHT SPECIFIC CONDITIONS.

DELAWARE DEPARTMENT OF TRANSPORTATION	RIPRAP DITCH		APPROVED Carolann Wicks CHIEF ENGINEER 12/5/05 DATE
	STANDARD NO. E-10 (2005)	SHT. 1 OF 1	RECOMMENDED [signature] DESIGN ENGINEER 11/29/05 DATE

08/30/2005

SCALE : N.T.S.

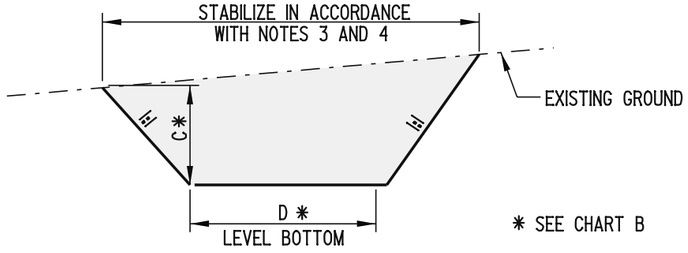

SECTION A-A

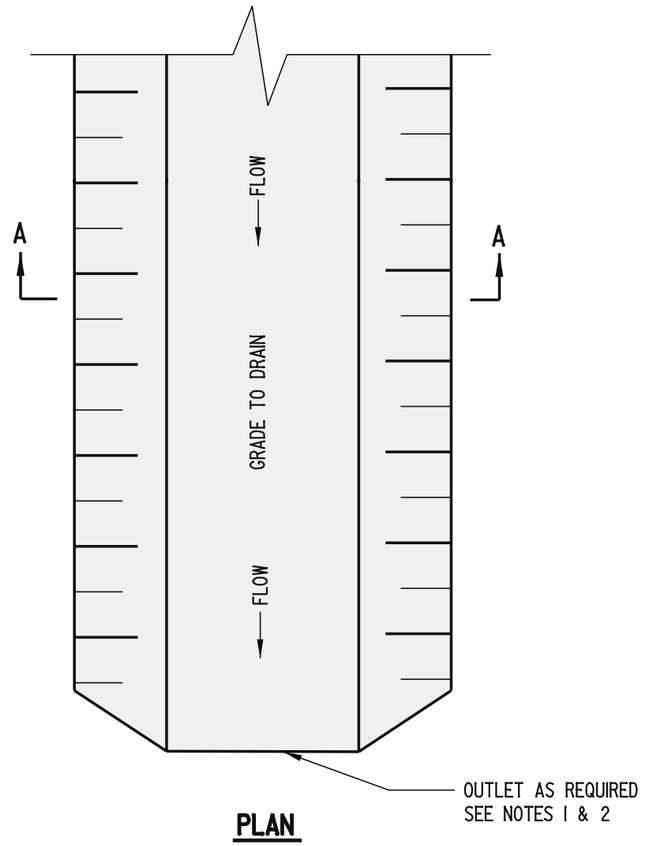

PLAN

CHART A - STABILIZATION			
SYMBOL	SWALE GRADE	TYPE OF TREATMENT	
		DRAINAGE AREA A (5 AC (2 ha) OR LESS)	DRAINAGE AREA B (5 AC - 10 AC (2 ha - 4 ha))
1	0.5-2.0%	SEED USED WITH EROSION CONTROL BLANKET	SEED USED WITH EROSION CONTROL BL.
2	2.1-8.0%	R-4 RIRRAP	R-4 RIRRAP
3	8.1-20%	ENGINEERED DESIGN	ENGINEERED DESIGN

CHART B - SWALE DIMENSIONS		
SYMBOL	SWALE A	SWALE B
C	1' (300) MIN.	1' (300) MIN.
D	4' (1200) MIN.	6' (1800) MIN.

SEE SECTION A - A

NOTES:

1). DIVERTED RUNOFF FROM A DISTURBED AREA SHALL BE CONVEYED TO A SEDIMENT TRAPPING DEVICE.

2). DIVERTED RUNOFF FROM AN UNDISTURBED AREA SHALL OUTLET DIRECTLY INTO AN UNDISTURBED STABILIZED AREA AT NON-EROSIVE VELOCITY.

3). IF TEMPORARY SWALES OR CLEAN WATER DIVERSIONS ARE TO BE OPERATIONAL FOR MORE THAN 14 DAYS, THEY SHALL BE STABILIZED IN ACCORDANCE WITH CHART A PRIOR TO BECOMING OPERATIONAL.

4). IF TEMPORARY SWALES OR CLEAN WATER DIVERSIONS ARE TO BE OPERATIONAL FOR LESS THAN 14 DAYS, THEY SHALL BE STABILIZED WITH GEOTEXTILE IN ACCORDANCE WITH THE STANDARD DETAIL, "GEOTEXTILE-LINED CHANNEL DIVERSION".

DELAWARE
DEPARTMENT OF TRANSPORTATION

TEMPORARY SWALE

STANDARD NO. E-11 (2005) | SHT. 1 OF 1

APPROVED Carolann Wicks CHIEF ENGINEER 12/5/05 DATE

RECOMMENDED James M. O'Neill DESIGN ENGINEER 11/29/05 DATE

08/30/2005

SCALE : N.T.S.

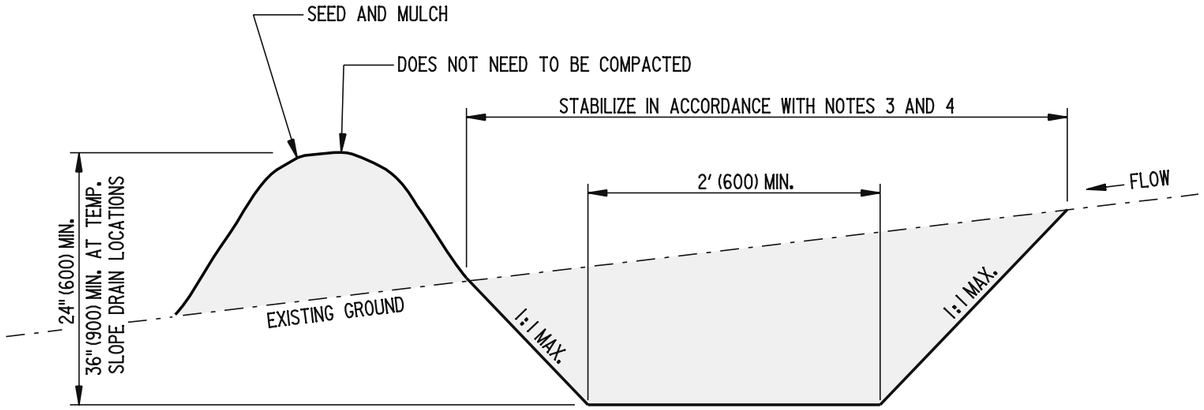

SECTION A-A

CHART A - SWALE STABILIZATION		
SYMBOL	SWALE GRADE	TYPE OF TREATMENT
A-1	0.5-2.0%	SEED AND EROSION CONTROL BLANKET
A-2	2.1-8.0%	LINED R-4 RIPRAP
A-3	8.1-20%	ENGINEERED DESIGN

MAXIMUM DRAINAGE AREA: 2 ACRES (0.8 ha)

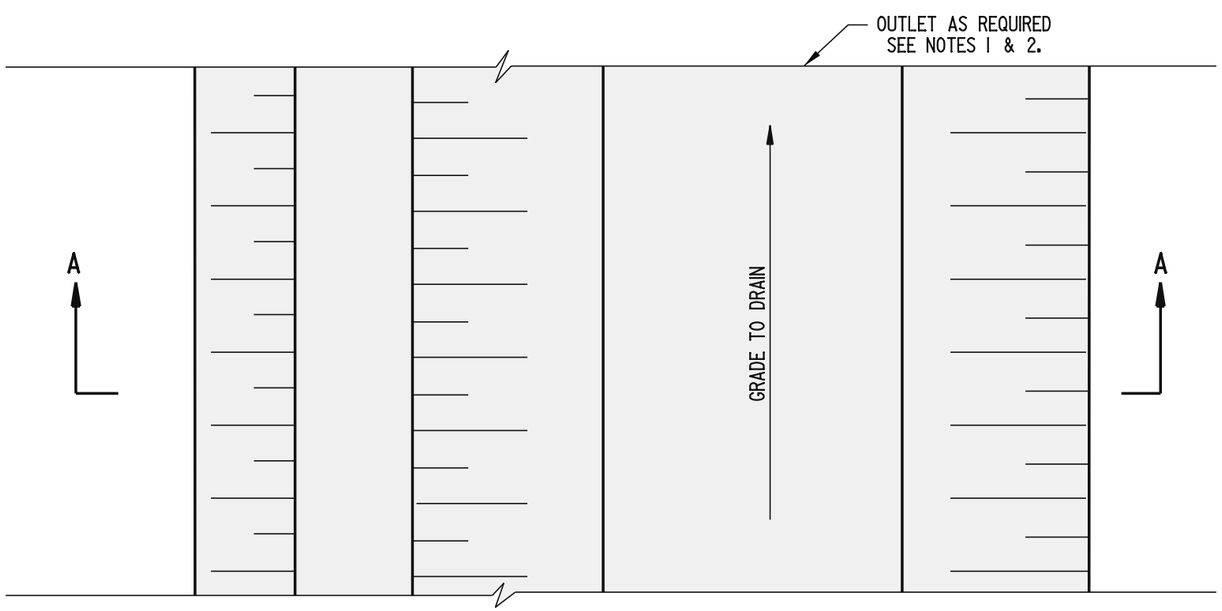

PLAN

NOTES:

1). DIVERTED RUNOFF FROM A DISTURBED AREA SHALL BE CONVEYED TO A SEDIMENT TRAPPING DEVICE.

2). DIVERTED RUNOFF FROM AN UNDISTURBED AREA SHALL OUTLET INTO AN UNDISTURBED STABILIZED AREA AT NON-EROSIVE VELOCITY.

3). IF PERIMETER DIKE SWALES ARE TO BE OPERATIONAL FOR MORE THAN 14 DAYS, THEY SHALL BE STABILIZED IN ACCORDANCE WITH CHART A PRIOR TO BECOMING OPERATIONAL.

4). IF TEMPORARY SWALES OR CLEAN WATER DIVERSIONS ARE TO BE OPERATIONAL FOR LESS THAN 14 DAYS, THEY SHALL BE STABILIZED WITH GEOTEXTILE IN ACCORDANCE WITH THE STANDARD DETAIL, "GEOTEXTILE-LINED CHANNEL DIVERSION".

DELAWARE
DEPARTMENT OF TRANSPORTATION

PERIMETER DIKE / SWALE

STANDARD NO. E-12 (2005) | SHT. 1 OF 1

APPROVED Carolann Wicks CHIEF ENGINEER 12/5/05 DATE

RECOMMENDED James M. O'Neill DESIGN ENGINEER 11/29/05 DATE

09/02/2005

SCALE : N.T.S.

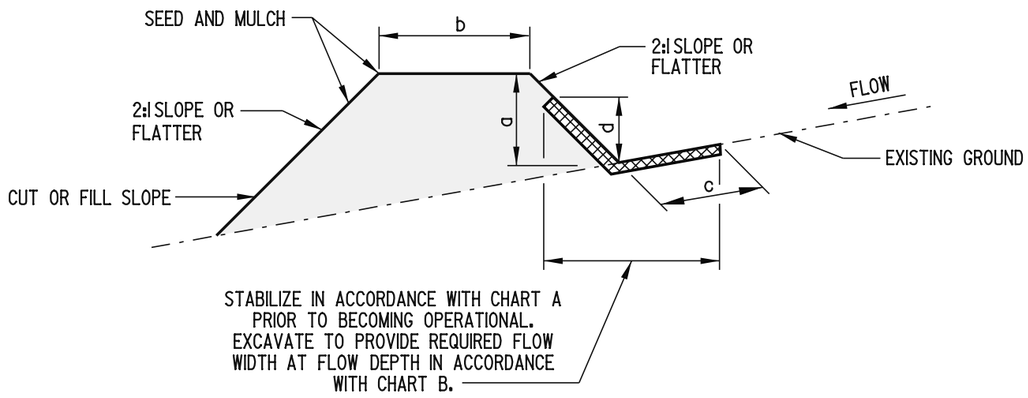

SECTION A-A

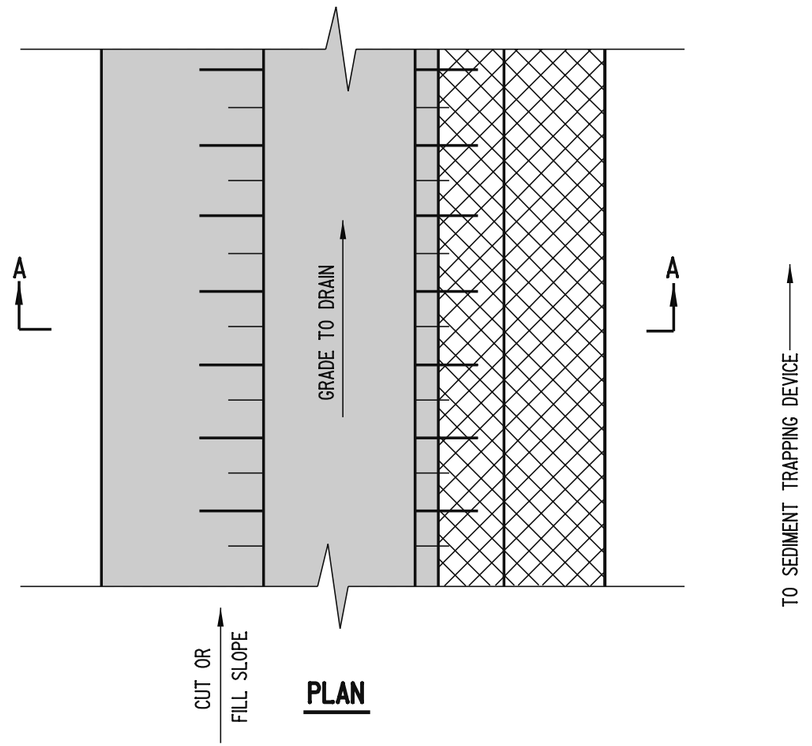

PLAN

CHART A - FLOW CHANNEL STABILIZATION		
TYPE	CHANNEL GRADE	TYPE OF TREATMENT
1	0.5-2.0%	SEED AND EROSION CONTROL BLANKET
2	2.1-8.0%	R-4 RIPRAP
3	8.1-20%	ENGINEERED DESIGN

CHART B - EARTH DIKE DIMENSIONS		
SYMBOL	DIKE A (5 ac (2 ha) or less)	DIKE B (5-10ac(2-4 ha))
a-DIKE HEIGHT	12" (300)	18" (450)
b-DIKE WIDTH	12" (300)	24" (600)
c-FLOW WIDTH	48" (1200)	72" (1800)
d-FLOW DEPTH	14" (350)	27" (680)

NOTES: 1). IF DESIRED, TOP WIDTH MAY BE WIDER AND SIDE SLOPES MAY BE FLATTER TO FACILITATE CROSSING BY CONSTRUCTION TRAFFIC.

2). FIELD LOCATION SHOULD BE ADJUSTED AS NEEDED TO INSURE A STABILIZED OUTFALL.

DELAWARE
DEPARTMENT OF TRANSPORTATION

EARTH DIKE

STANDARD NO. E-13 (2005) | SHT. 1 OF 1

APPROVED Carolann Wicks CHIEF ENGINEER 12/5/05 DATE

RECOMMENDED James M. O'Neill DESIGN ENGINEER 11/29/05 DATE

09/02/2005

SCALE : N.T.S.

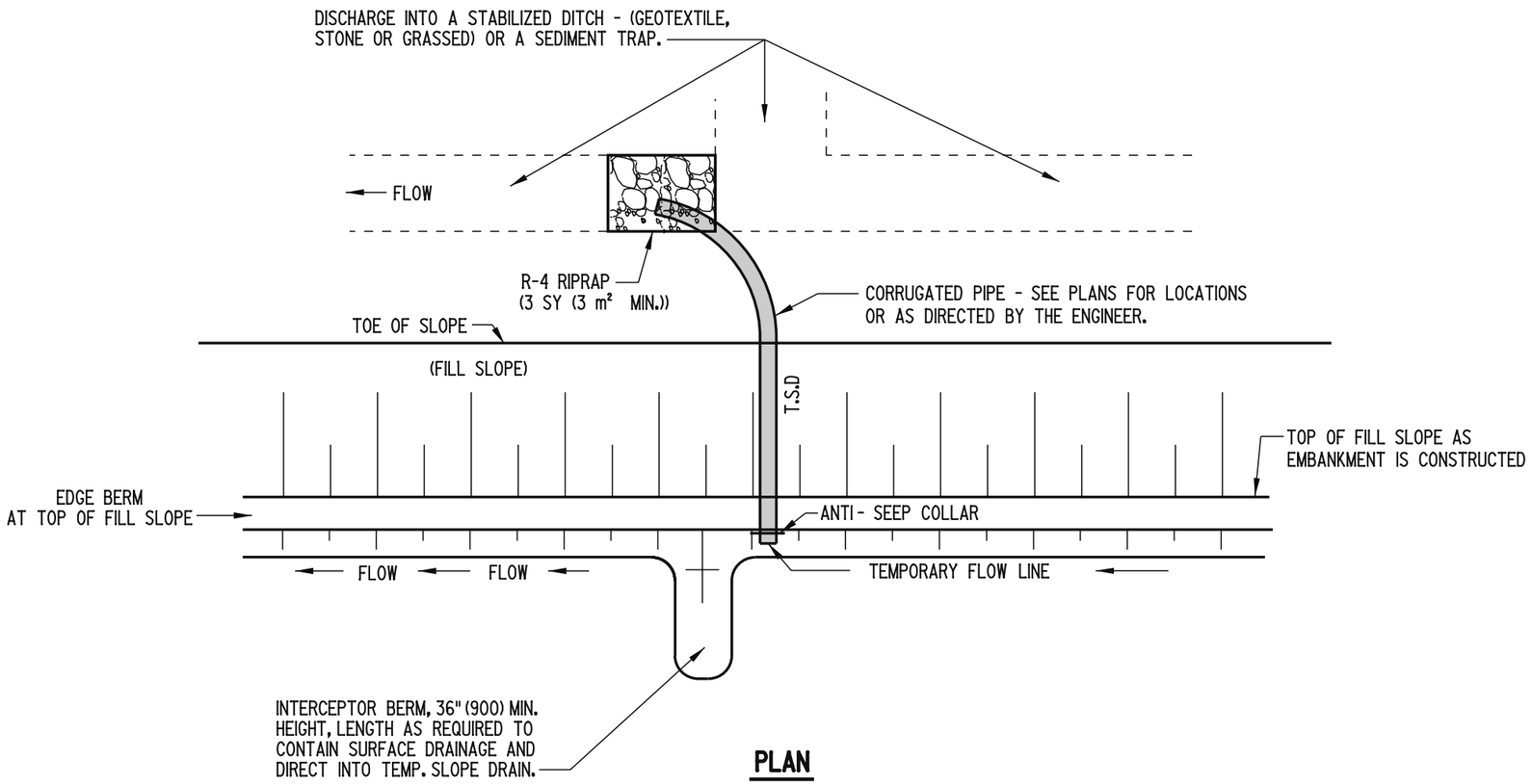

PLAN

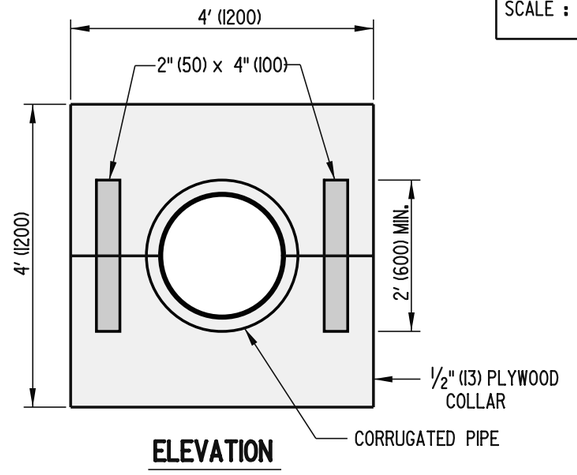

ELEVATION

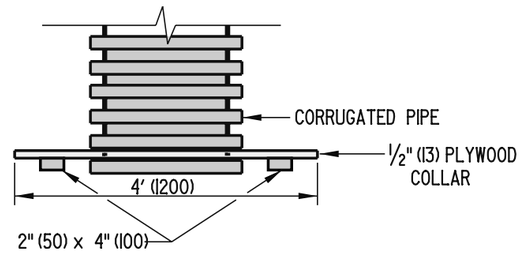

PLAN

ANTI-SEEP COLLAR

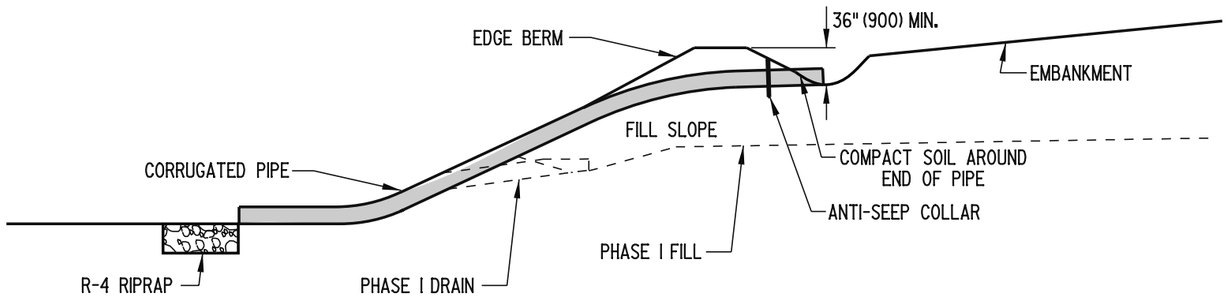

SLOPE DRAIN PROFILE

(FOR FILL SLOPES)

NOTES: 1). ALL TEMPORARY SLOPE DRAINS SHALL DISCHARGE INTO THE BACK OF SEDIMENT TRAPS, INTO SEDIMENT BASINS OR DITCHES DISCHARGING INTO TRAPS OR BASINS.

2). TEMPORARY SLOPE DRAINS SHALL BE USED AT THE TOP OF FILL SLOPES AS EMBANKMENT IS CONSTRUCTED, TO PREVENT EXCESSIVE EROSION UNTIL SHOULDERS ARE CONSTRUCTED AND THE SLOPES ARE SEEDED AND MULCHED.

DELAWARE DEPARTMENT OF TRANSPORTATION	TEMPORARY SLOPE DRAIN		APPROVED Carolann Wicks CHIEF ENGINEER 12/5/05 DATE
	STANDARD NO. E-14 (2005)	SHT. 1 OF 1	RECOMMENDED DESIGN ENGINEER 11/29/05 DATE

09/02/2005

SCALE : N.T.S.

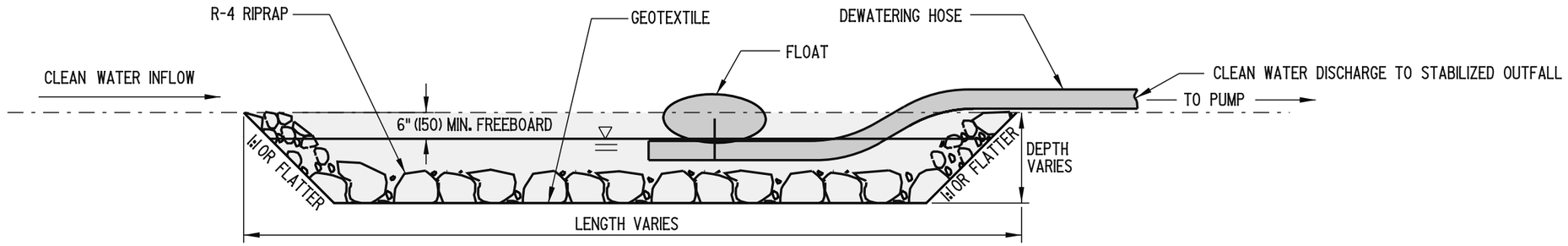

NOTES: 1). THE WORK SHALL CONSIST OF CONSTRUCTING A STILLING WELL FOR THE PURPOSE OF PUMPING CLEAN WATER AROUND A DISTURBED CONSTRUCTION AREA TO A STABILIZED OUTFALL.

2). THE DIMENSIONS OF THE STILLING WELL SHALL BE AS SHOWN ON THE PLANS OR AS DIRECTED BY THE ENGINEER.

DELAWARE DEPARTMENT OF TRANSPORTATION	STILLING WELL		APPROVED Carolann Wicks CHIEF ENGINEER 12/5/05 DATE
	STANDARD NO. E-15 (2005)	SHT. 1 OF 1	RECOMMENDED DESIGN ENGINEER 11/29/05 DATE

09/07/2005

SCALE : N.T.S.

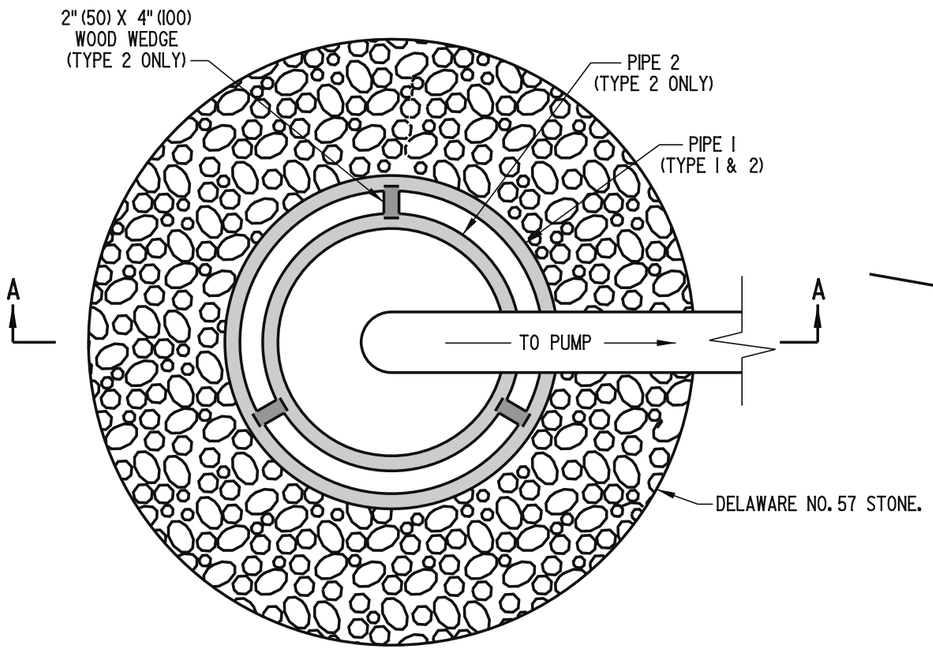

PLAN

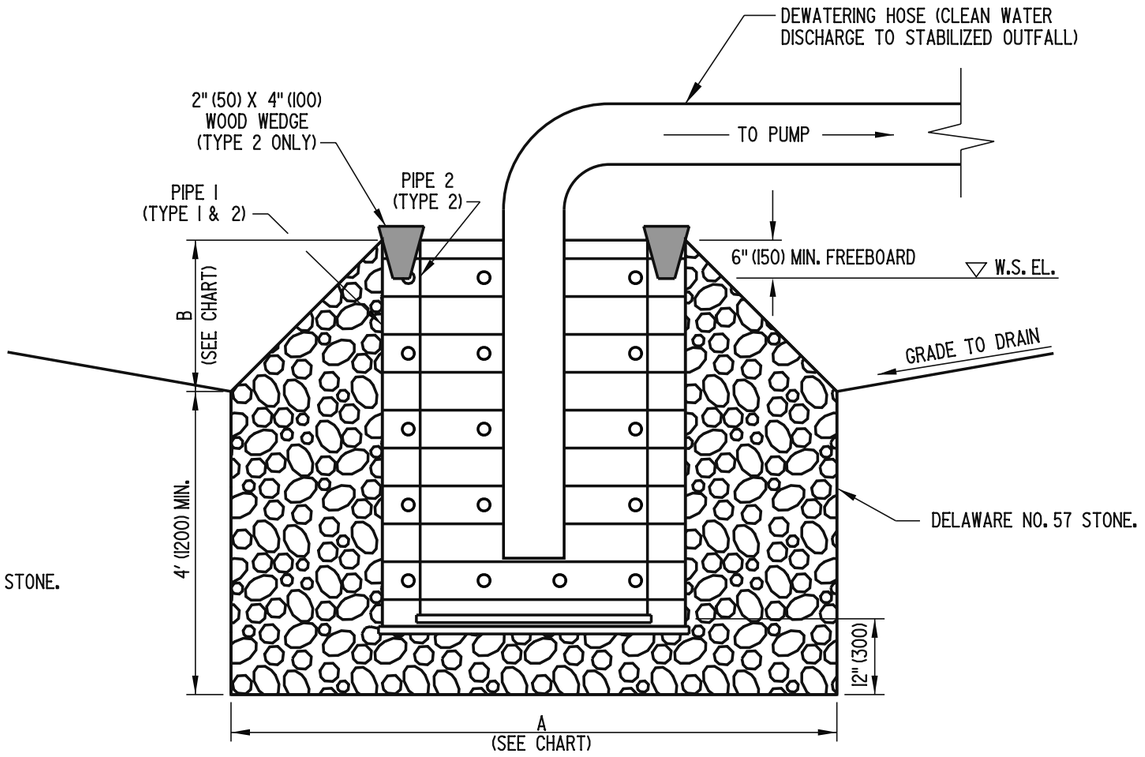

SECTION A-A

SUMP PIT CHART				
TYPE	PIPE 1	PIPE 2	A	B
1	PERFORATED 24" (600) CMP WITH PERFORATED CAP WELDED ON BOTTOM AND COMPLETELY WRAPPED WITH GEOTEXTILE.	N/A	4' (1200) MIN.	12" (300)
2	PERFORATED 48" (1200) CMP WITH PERFORATED CAP WELDED ON BOTTOM	REMOVABLE PERFORATED 36" (900) CMP WITH PERFORATED CAP WELDED ON BOTTOM AND COMPLETELY WRAPPED WITH GEOTEXTILE.	8' (2400) MIN.	24" (600)

NOTES:

1). THE WORK SHALL CONSIST OF CONSTRUCTING A SUMP PIT FOR THE PURPOSE OF FILTERING AND PUMPING WATER TO A STABILIZED OUTFALL.

2). GEOTEXTILE FOR THE 36" (900) CMP SHALL BE REPLACED WHEN CLOGGED WITH SEDIMENT.

3). ½" x ½" (13 x 13) 19 GAGE (I.I) WIRE MESH SHALL BE PLACED AROUND THE REMOVABLE 36" (900) CMP BEFORE ATTACHING THE GEOTEXTILE TO INCREASE FLOW THROUGH THE GEOTEXTILE.

4). ALL PERFORATIONS SHALL BE 1" (25) IN DIAMETER AND 12" (300) ON CENTER IN ALL DIRECTIONS.

5). TYPE 1 SUMP PIT SHALL BE USED ONLY WHEN PUMPING IS NEEDED FOR LESS THAN 7 DAYS.

DELAWARE
DEPARTMENT OF TRANSPORTATION

SUMP PIT, TYPE 1 & 2

STANDARD NO. E-16 (2005) | SHT. 1 OF 1

APPROVED Carolann Wicks CHIEF ENGINEER 12/5/05 DATE

RECOMMENDED James M. O'Neill DESIGN ENGINEER 11/29/05 DATE

09/07/2005

SCALE : N.T.S.

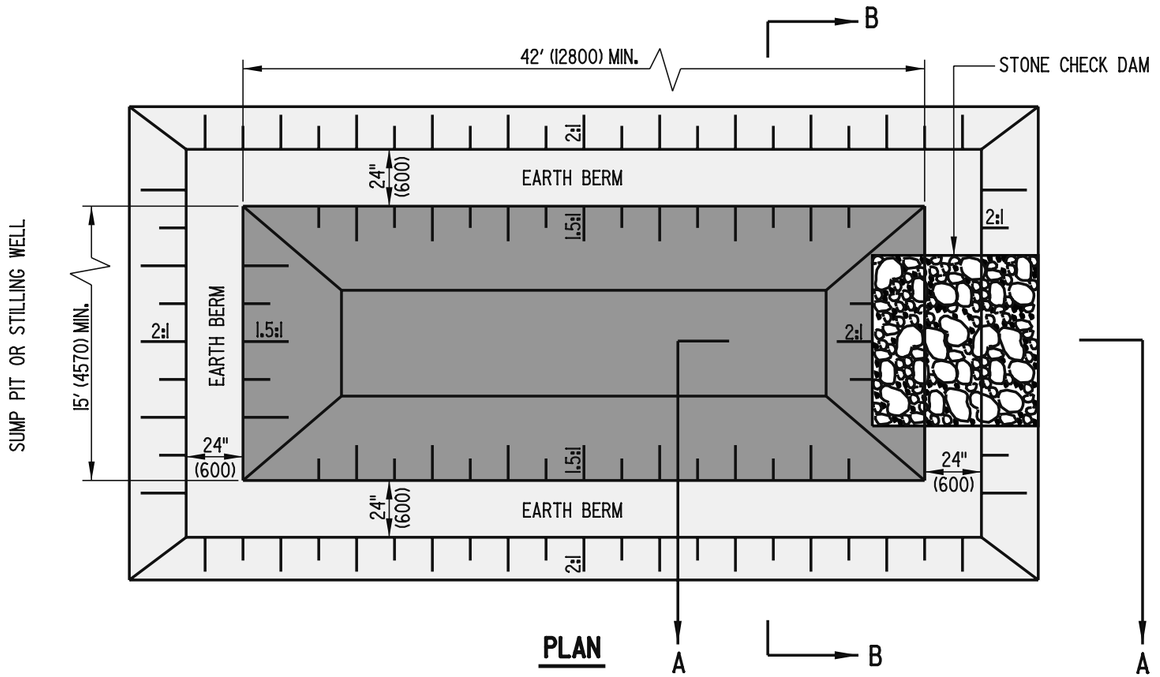

PLAN

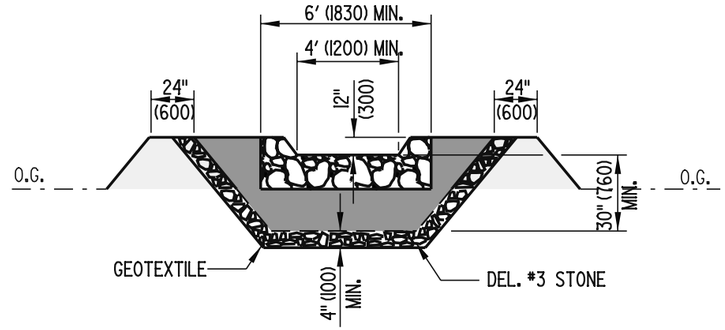

SECTION B-B

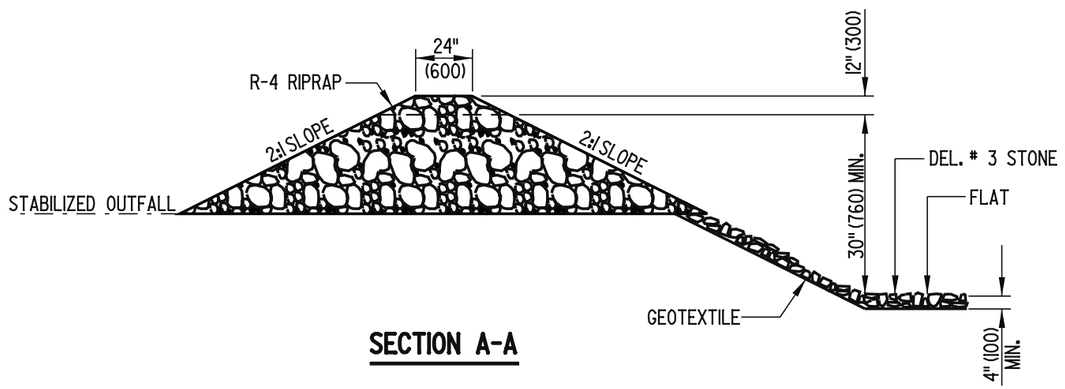

SECTION A-A

NOTES: 1.) A DEWATERING BASIN (DWB) IS USED TO REMOVE SEDIMENT FROM SEDIMENT-LADEN WATER PUMPED FROM A CONSTRUCTION SITE BEFORE THE WATER RE-ENTERS THE WATERWAY. THE DWB SHALL HAVE A MINIMUM TOP WIDTH OF 15' (4570) AND A MINIMUM DEPTH OF 3.5' (1065). THE MINIMUM TOP LENGTH SHOWN IN THE PLAN IS USED ONLY FOR QUANTITY CALCULATIONS BY THE ENGINEER. THE ACTUAL TOP LENGTH IN THE FIELD SHALL BE CALCULATED BY THE EQUATION:

US CUSTOMARY : TOP LENGTH (FEET) = 26' + .01 x Y
METRIC : TOP LENGTH (mm) = 7930 + 48300 x Y

WHERE Y IS THE MAXIMUM CAPACITY IN GALLONS PER MINUTE (CUBIC METERS PER SECOND) OF THE DEWATERING PUMP.

2.) THE OUTFALL FROM THE BASIN TO THE RECEIVING WATERS SHALL BE STABILIZED. PUMPING INTO THE DWB SHALL CEASE WHEN THE EFFLUENT FROM THE BASIN BECOMES SEDIMENT-LADEN.

3.) A SUMP PIT OR STILLING WELL (SEE STANDARD SHEETS) SHALL BE USED IN CONJUNCTION WITH A DWB. THE BASIN MAY BE BYPASSED INTO THE STABILIZED OUTFALL IF THE WATER BEING PUMPED IS NON-SEDIMENT-LADEN. DIRECT DISCHARGE TO THE RECEIVING WATERS SHALL CEASE AND BE REDIRECTED TO THE DWB WHEN EFFLUENT FROM THE PUMP BECOMES SEDIMENT-LADEN.

4.) MAINTENANCE MUST BE PERFORMED IN ORDER FOR THE DWB TO FUNCTION PROPERLY. ACCUMULATED SEDIMENT SHALL BE REMOVED AND DISPOSED OF IN AN APPROVED DISPOSAL AREA WHEN THE BASIN IS FILLED TO WITHIN 12" (300) FROM THE CREST.

5.) WHEN USED IN CONJUNCTION WITH A COFFERDAM, DEWATERING SHALL BEGIN NO SOONER THAN 12 HOURS AFTER COFFERDAM INSTALLATION IN ORDER TO ALLOW SEDIMENT PRODUCED DURING INSTALLATION TO SETTLE COMPLETELY.

DELAWARE DEPARTMENT OF TRANSPORTATION	DEWATERINGBASIN	APPROVED Carolann Wicks CHIEF ENGINEER 12/5/05 DATE
	STANDARD NO. E-17 (2005) SHT. 1 OF 1	RECOMMENDED DESIGN ENGINEER 11/29/05 DATE

09/07/2005

SCALE : N.T.S.

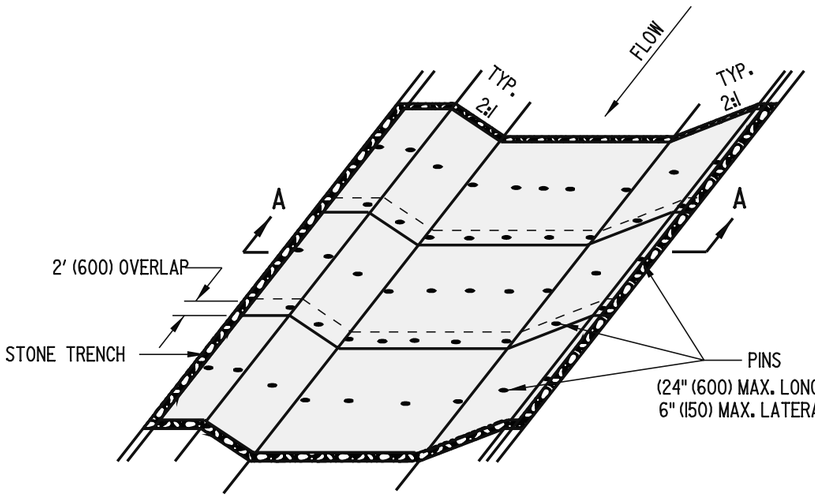

OBLIQUE VIEW

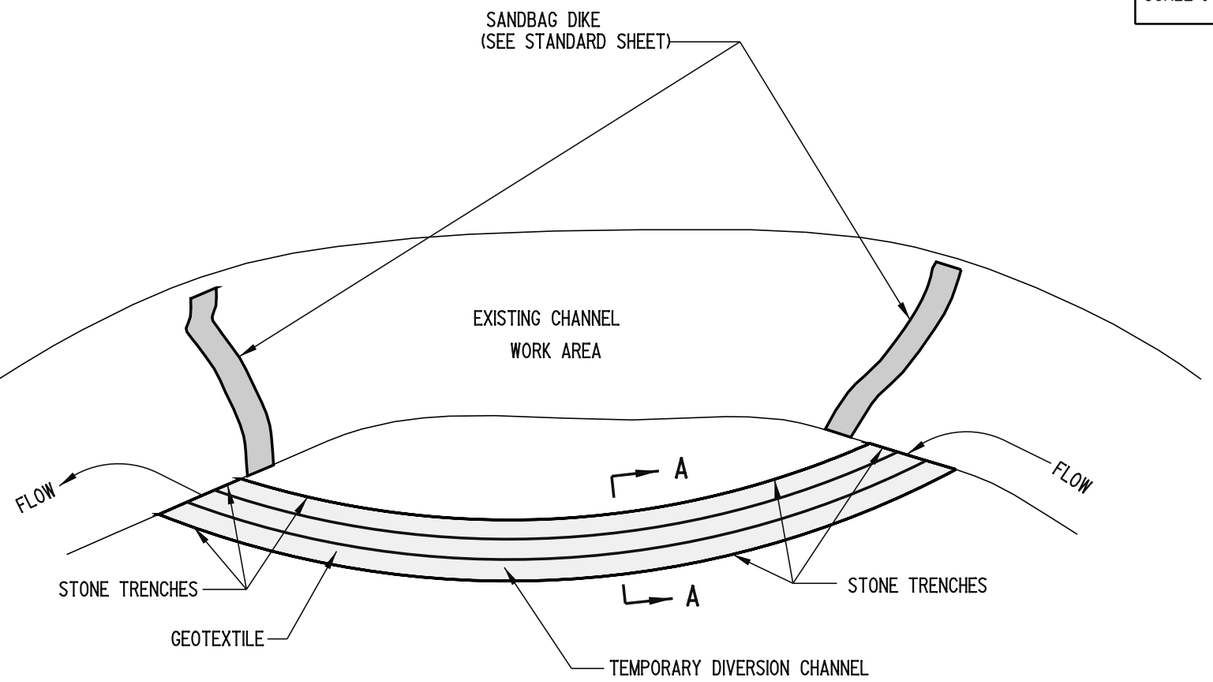

PLAN

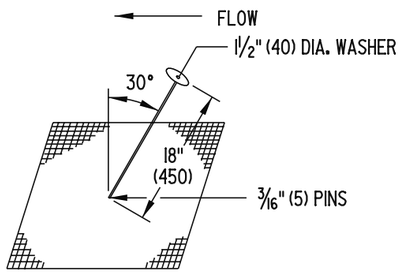

FASTENING DETAIL

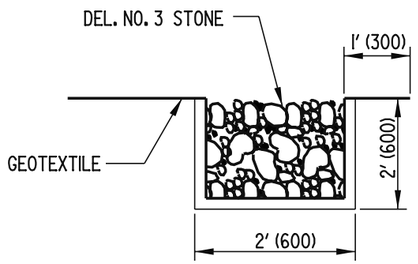

TRENCHING DETAIL

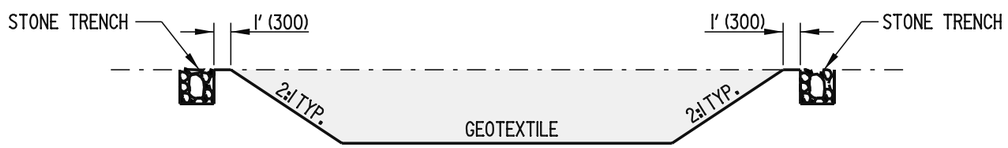

SECTION A-A

NOTE: SEE PLANS FOR LOCATION, DIMENSIONS, GRADES, ETC.

DELAWARE DEPARTMENT OF TRANSPORTATION	GEOTEXTILE-LINED CHANNEL DIVERSION		APPROVED Carolann Wicks CHIEF ENGINEER 12/5/05 DATE
	STANDARD NO. E-18 (2005)	SHT. 1 OF 1	RECOMMENDED DESIGN ENGINEER 11/29/05 DATE

09/08/2005

SCALE : N.T.S.

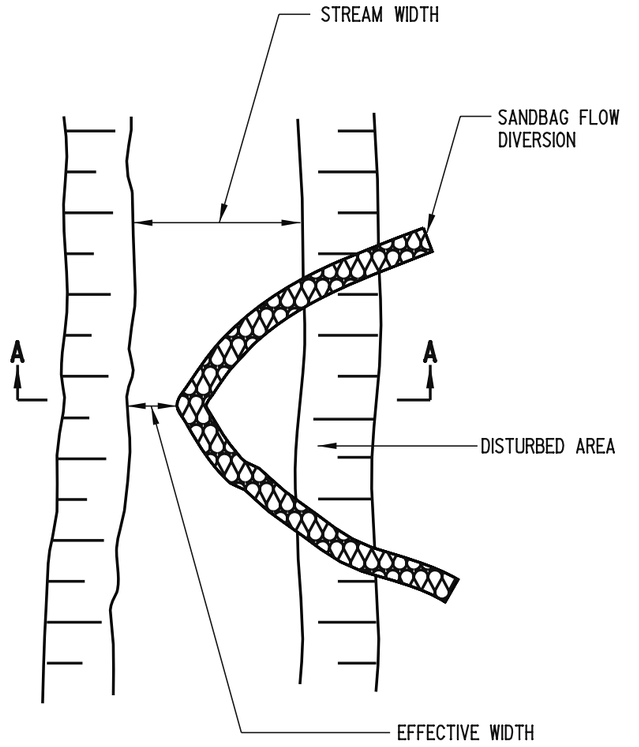

PLAN

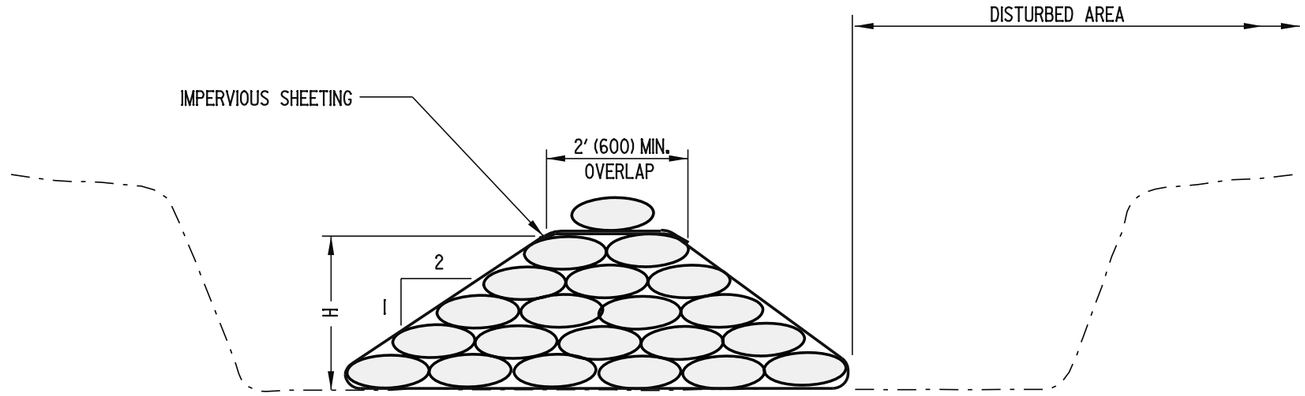

SECTION A-A

NOTES:

1). THE WORK SHALL CONSIST OF INSTALLING FLOW DIVERSIONS FOR THE PURPOSE OF EROSION CONTROL WHEN CONSTRUCTION ACTIVITIES TAKE PLACE WITHIN THE STREAM CHANNEL SUCH AS BANK STABILIZATION OR BRIDGE ABUTMENT CONSTRUCTION.

2). THE DIVERSION STRUCTURE SHALL BE INSTALLED FROM UPSTREAM TO DOWNSTREAM.

3). THE EFFECTIVE CHANNEL WIDTH SHALL BE SIZED TO PASS A ONE YEAR STORM EVENT PEAK FLOW, OR 1/3 OF STREAM WIDTH, WHICHEVER IS GREATER.

4). THE SANDBAG DIVERSION HEIGHT (H) SHALL BE 1' (300) ABOVE THE PEAK ELEVATION OF THE ONE YEAR STORM.

DELAWARE DEPARTMENT OF TRANSPORTATION	SANDBAG DIVERSION		APPROVED Carolann Wicks CHIEF ENGINEER 12/5/05 DATE
	STANDARD NO. E-19 (2005)	SHT. 1 OF 1	RECOMMENDED James M. O'Neill DESIGN ENGINEER 11/29/05 DATE

09/08/2005

SCALE : N.T.S.

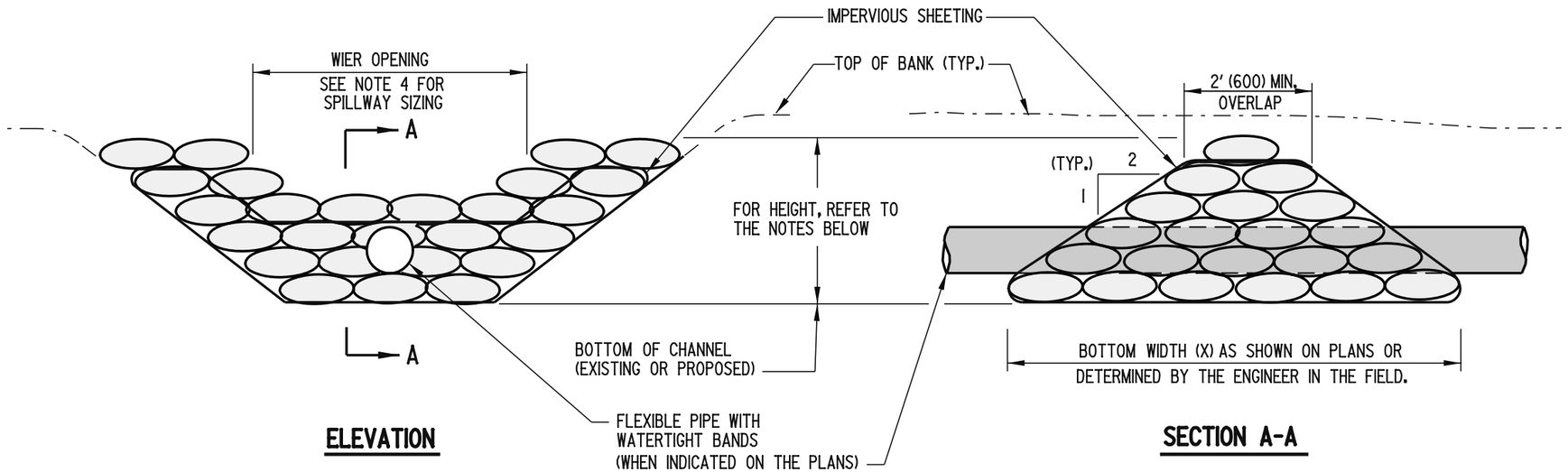

ELEVATION

SECTION A-A

NOTES: 1). THE WORK SHALL CONSIST OF INSTALLING A SANDBAG DIKE FOR THE PURPOSE OF EROSION CONTROL WHEN CONSTRUCTION ACTIVITIES TAKE PLACE WITHIN THE STREAM CHANNEL SUCH AS BANK STABILIZATION OR BRIDGE ABUTMENT CONSTRUCTION.

2). THE SANDBAG DIKE SHALL BE INSTALLED AT THE UPSTREAM LOCATION FIRST.

3). THE HEIGHT OF THE SANDBAG DIKE SHALL BE 1' (300) ABOVE THE PEAK ELEVATION OF THE ONE YEAR STORM, OR EQUAL WITH THE TOP OF BANK, WHICHEVER IS LESS. SEE PLANS FOR INFORMATION.

4). THE SPILLWAY SHALL BE SIZED TO PASS A (1) ONE YEAR STORM EVENT PEAK FLOW, SEE PLANS.

5). THE PIPE, WHEN UTILIZED, SHALL BE SIZED TO PASS THE STREAM BASE FLOW.

DELAWARE DEPARTMENT OF TRANSPORTATION	SANDBAG DIKE		APPROVED Carolann Wicks CHIEF ENGINEER 12/5/05 DATE
	STANDARD NO. E-20 (2005)	SHT. 1 OF 1	RECOMMENDED James M. O'Neill DESIGN ENGINEER 11/29/05 DATE

09/08/2005

SCALE : N.T.S.

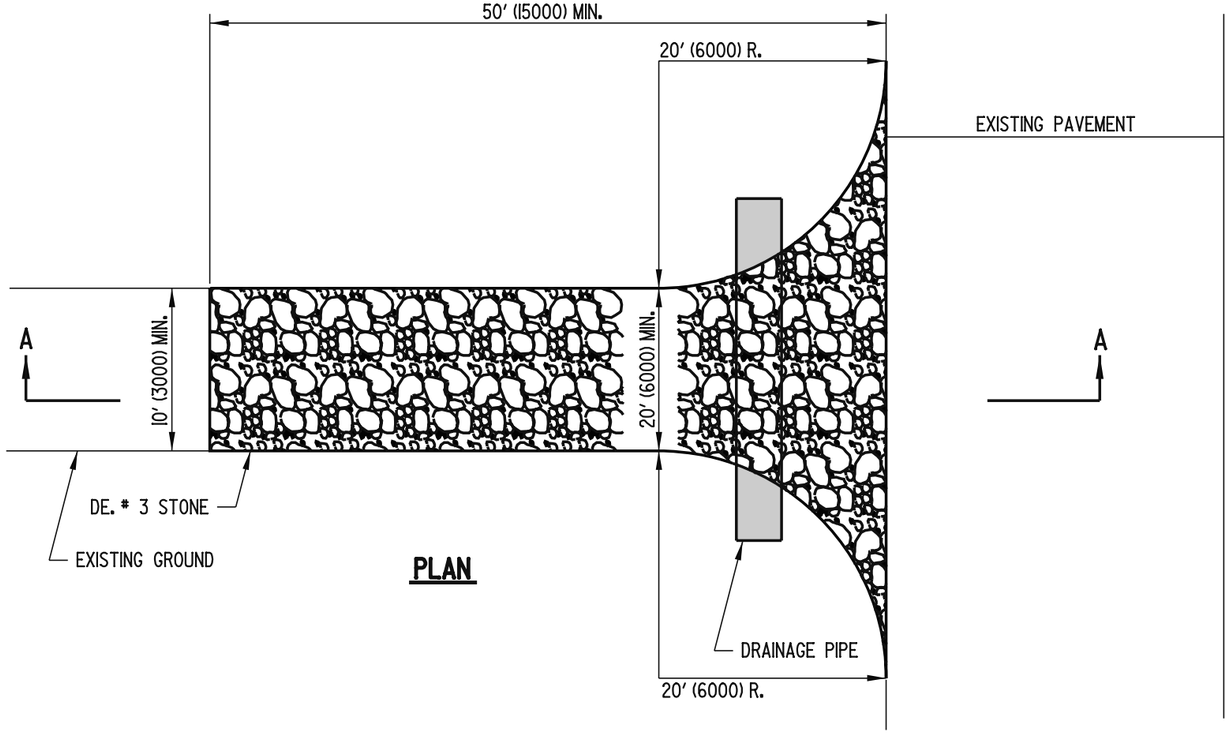

PLAN

NOTES:

1). ALL SURFACE WATER FLOWING OR DIVERTED TOWARD CONSTRUCTION ENTRANCES SHALL BE PIPED UNDER THE ENTRANCE. IF NECESSARY, A MOUNTABLE BERM WITH 5:1 SLOPES SHALL BE ALLOWED TO FACILITATE PLACEMENT OF PIPES IN SHALLOW CONDITIONS.

2). THE LOCATION AND NUMBER OF STABILIZED CONSTRUCTION ENTRANCES SHALL BE AS INDICATED ON THE PLANS. ANY CHANGE IN LOCATION, ADDITION, OR DELETION OF AN ENTRANCE SHALL BE APPROVED IN ADVANCE BY THE ENGINEER.

3). DRAINAGE PIPE, IF UTILIZED, SHALL BE PAID FOR SEPARATELY UNDER THE APPROPRIATE BID ITEM.

4). THE TOP 2" (50) OF STONE SHALL BE REMOVED AND REPLACED WITH 2" (50) OF CLEAN STONE WHEN VOIDS ARE FILLED OR AS DIRECTED BY THE ENGINEER.

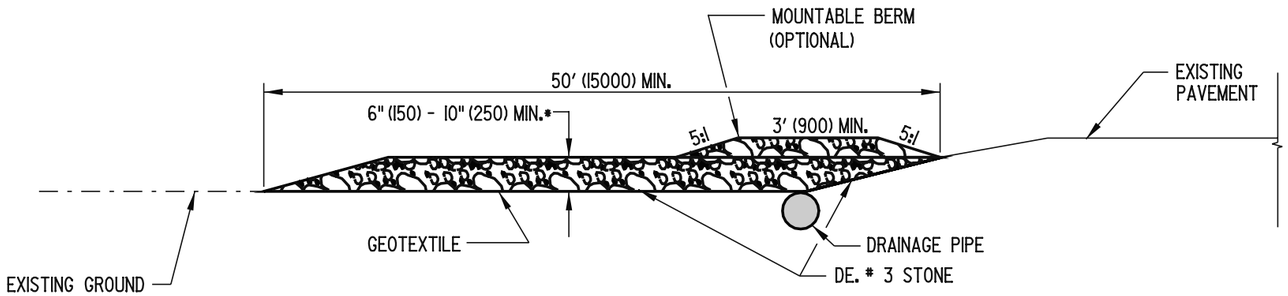

SECTION A-A

* 6" (150) MIN. (≤ 3 AXLE)
10" (250) MIN. (> 3 AXLE)

DELAWARE DEPARTMENT OF TRANSPORTATION	STABILIZED CONSTRUCTION ENTRANCE		APPROVED Carolann Wicks CHIEF ENGINEER 12/5/05 DATE
	STANDARD NO. E-21 (2005)	SHT. 1 OF 1	RECOMMENDED DESIGN ENGINEER 11/29/05 DATE

09/08/2005

SCALE : N.T.S.

NOTES: 1). ALL P.V.C. PIPES ARE TO BE 4" (100) I.D., SCHEDULE 40

2). ALL JOINTS OF THE FLOATATION SECTION SHALL BE SOLVENT WELDED. JOINTS OF SKIMMER SECTION NEED NOT BE WATER-TIGHT.

3). 4" (100) HDPE FLEXIBLE DRAIN PIPE IS TO BE ATTACHED TO THE POND OUTLET STRUCTURE WITH WATER-TIGHT CONNECTIONS.

4). ORIFICE IS TO BE SIZED ACCORDING TO STORAGE VOLUME AND TO SLOWLY RELEASE 1" (25) RUNOFF FOR AT LEAST 24-HOURS.

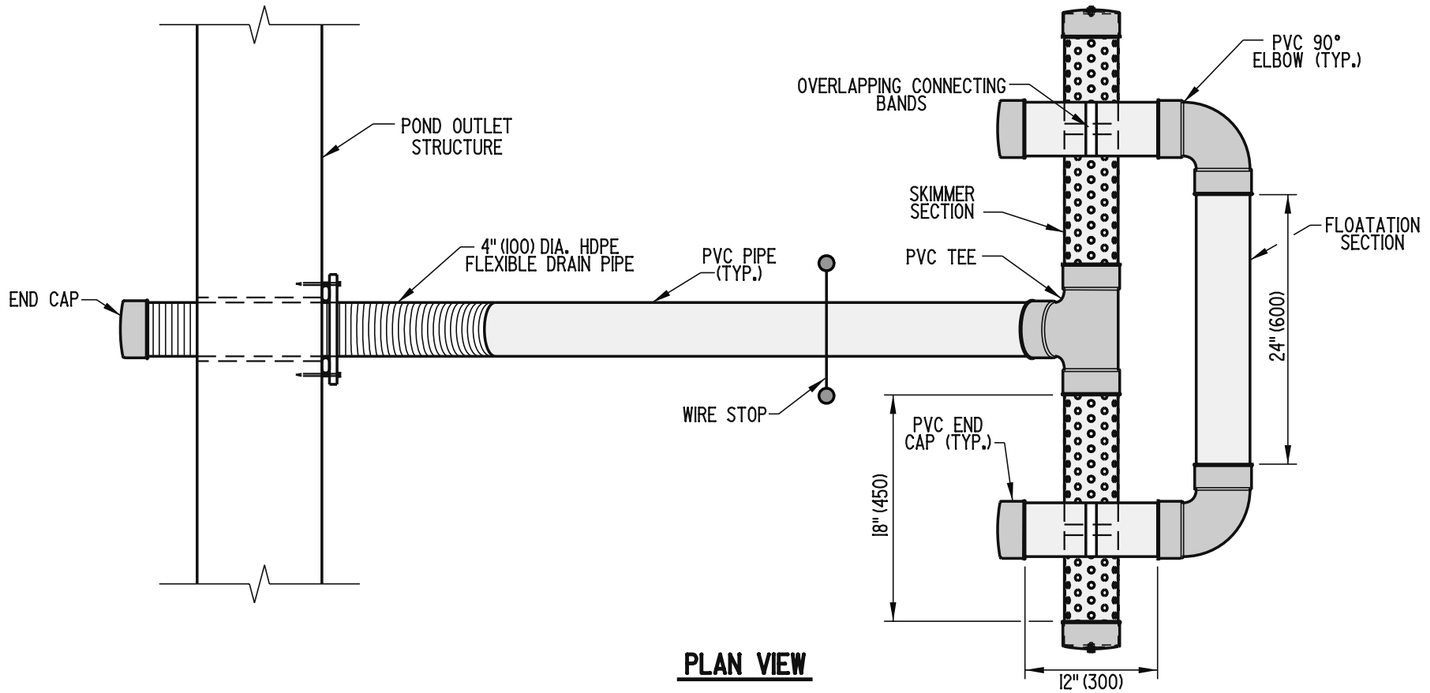

PLAN VIEW

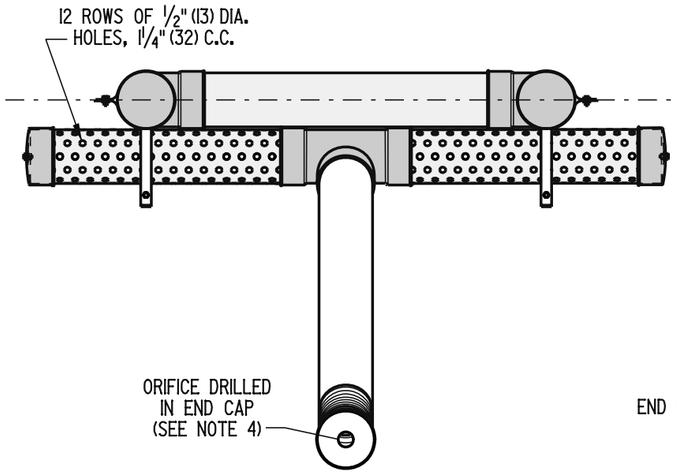

FRONT VIEW

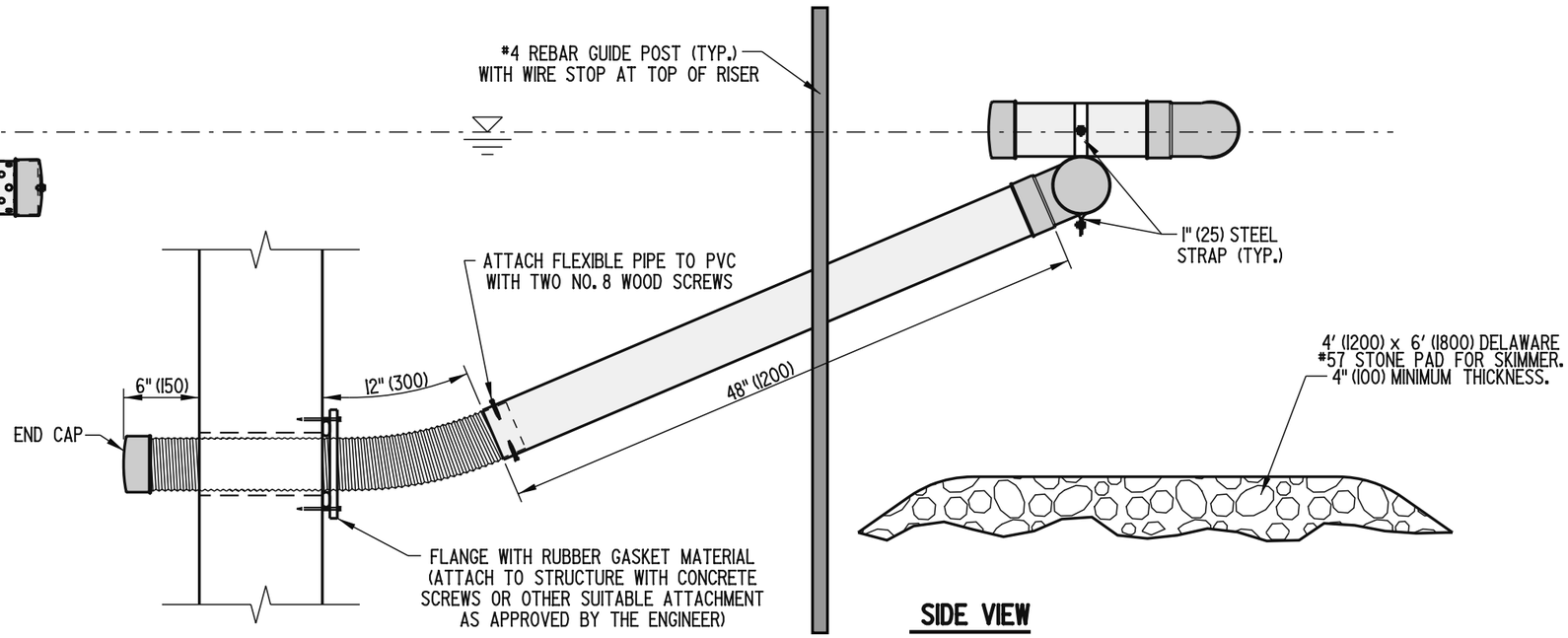

SIDE VIEW

DELAWARE DEPARTMENT OF TRANSPORTATION	SKIMMER DEWATERING DEVICE		APPROVED CHIEF ENGINEER	10/10/06 DATE
	STANDARD NO. E-22 (2006)	SHT. 1 OF 1	RECOMMENDED DESIGN ENGINEER	10/9/06 DATE

10/02/2006

SCALE : N.T.S.

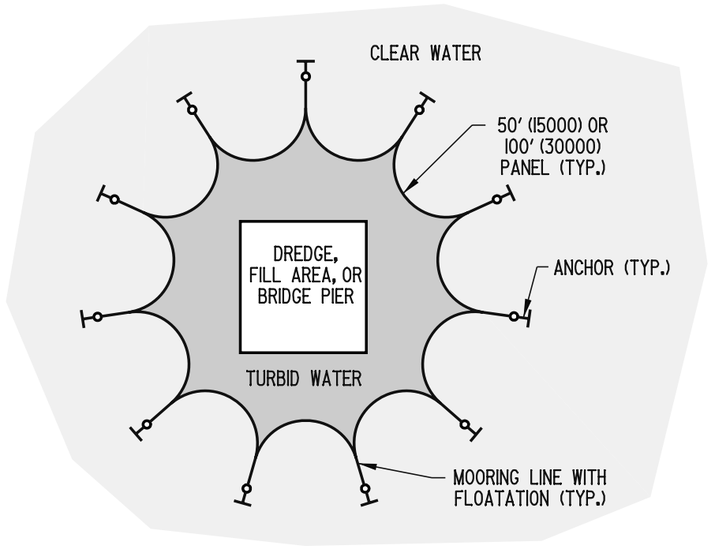

PLAN VIEW
OPEN WATER APPLICATION

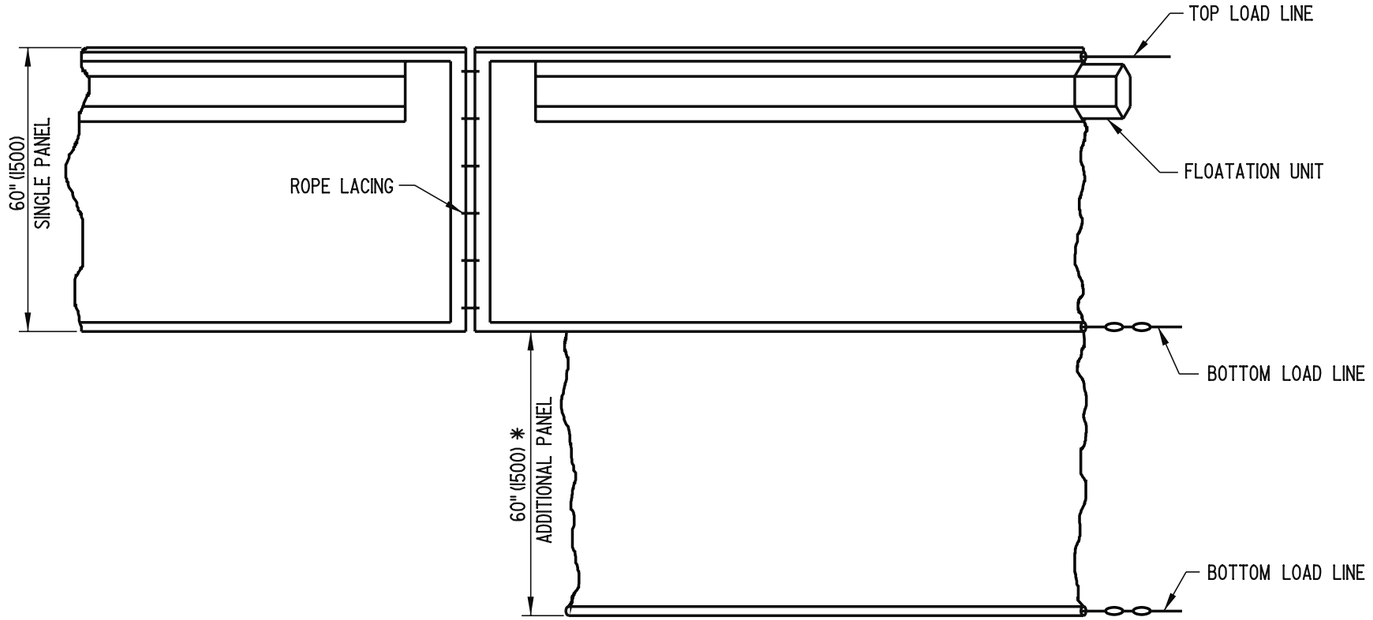

ELEVATION

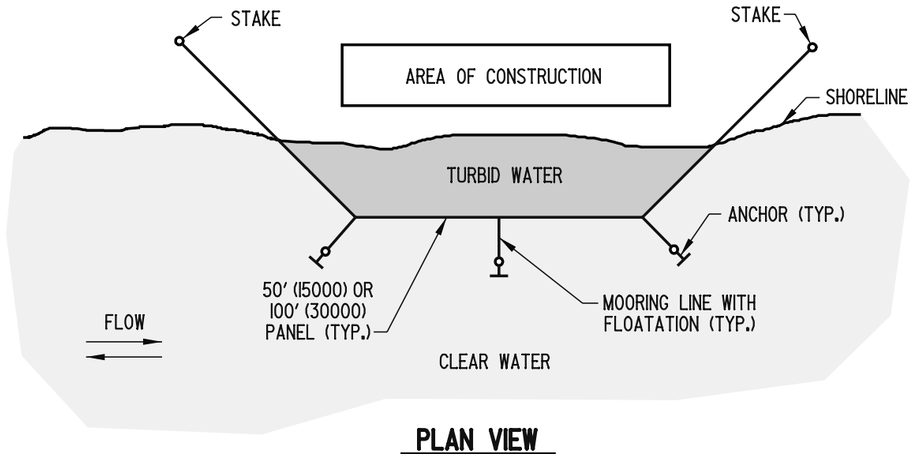

PLAN VIEW
SHORELINE APPLICATION

FLOATING TURBIDITY CURTAIN

NOTE: 1.) ADDITIONAL PANEL REQUIRED FOR DEPTHS GREATER THAN 5' (1500).

2.) FLOATING TURBIDITY CURTAIN SHALL REACH BOTTOM UP TO DEPTHS OF 10' (3000) BY USING TWO PANELS. DEPTHS GREATER THAN 10' (3000) SHALL REQUIRE SPECIAL DEPTH CURTAINS SPECIFICALLY CALLED FOR IN THE PLANS OR AS DIRECTED BY THE ENGINEER.

DELAWARE DEPARTMENT OF TRANSPORTATION	TURBIDITY CURTAIN		APPROVED Caroline Wicks CHIEF ENGINEER 12/5/05 DATE
	STANDARD NO. E-23 (2005)	SHT. 1 OF 2	RECOMMENDED DESIGN ENGINEER 11/29/05 DATE

09/08/2005

SCALE : N.T.S.

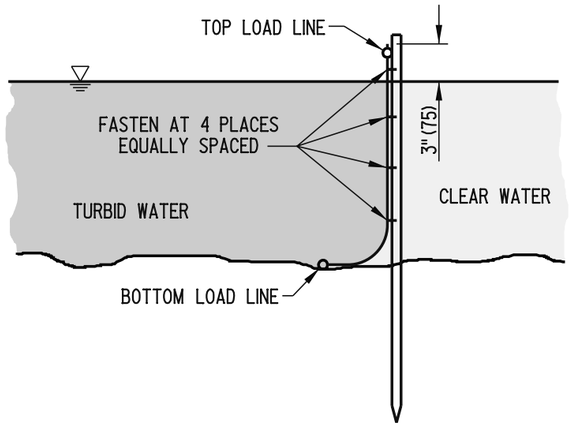

SECTION

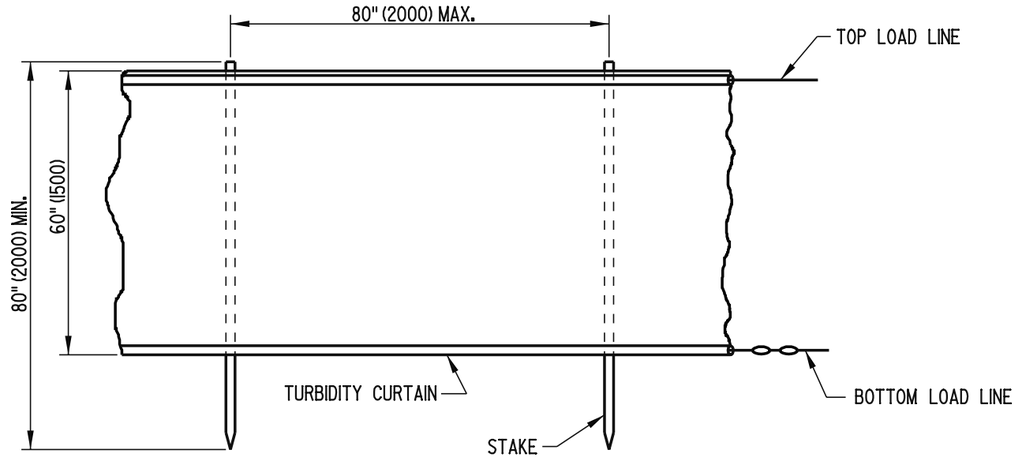

ELEVATION

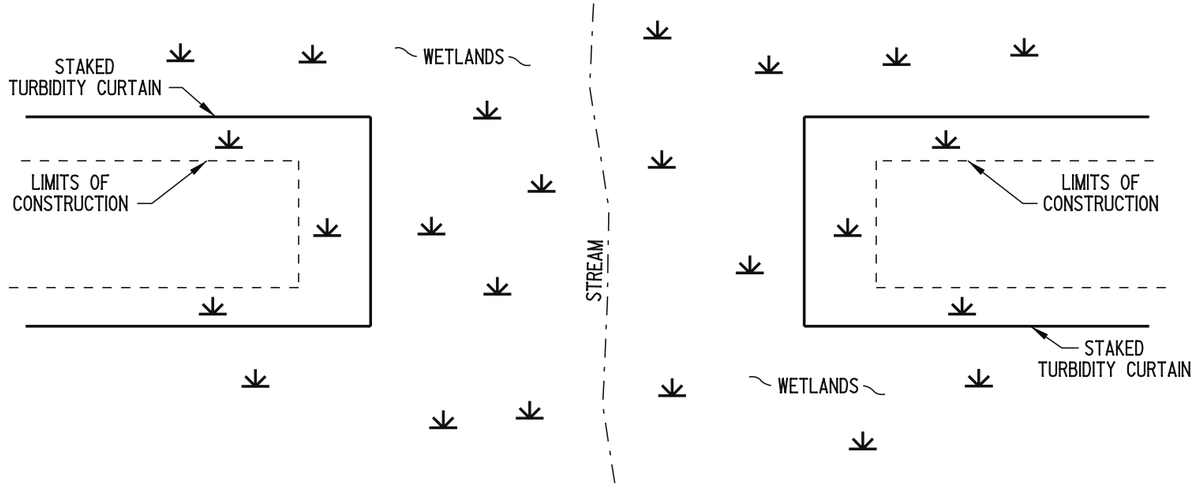

PLAN VIEW
SHALLOW WATER/MARSH APPLICATION

STAKED TURBIDITY CURTAIN

DELAWARE DEPARTMENT OF TRANSPORTATION	TURBIDITY CURTAIN		APPROVED Carolann Wicks CHIEF ENGINEER — 12/5/05 DATE
	STANDARD NO. E-23 (2005)	SHT. 2 OF 2	RECOMMENDED James M. O'Neill DESIGN ENGINEER — 11/29/05 DATE

09/08/2005

SCALE : N.T.S.

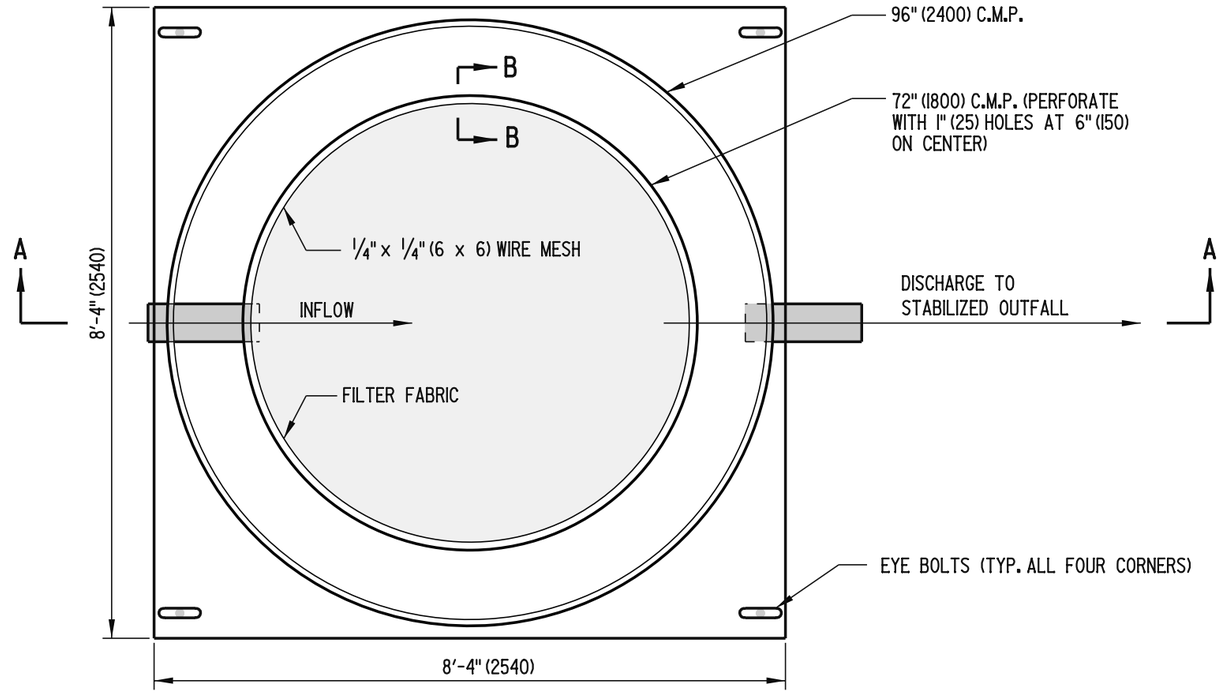

PLAN

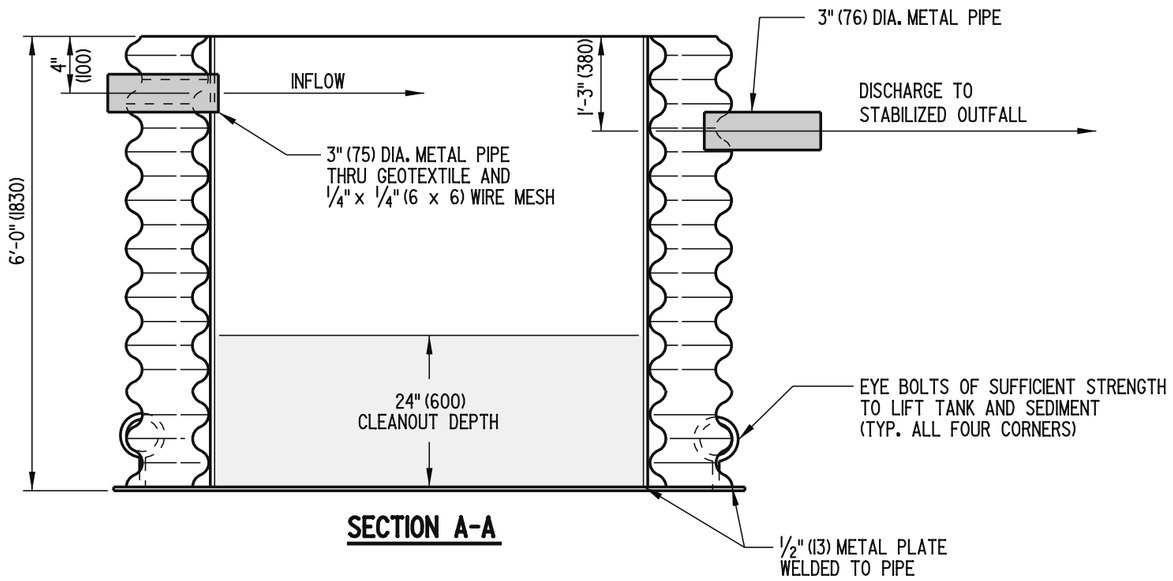

SECTION A-A

NOTES:

1). THE PORTABLE SEDIMENT TANK SHOWN MAY BE USED IN SITES WHERE SPACE IS LIMITED TO CONSTRUCT A DEWATERING BASIN.

2). THE MAXIMUM PUMP DISCHARGE INTO THIS TYPICAL PORTABLE SEDIMENT TANK SHALL BE 425 GALLONS PER MINUTE (26 LITERS PER SECOND). THE FILTER FABRIC SHALL BE REPLACED WHEN THE PORTABLE SEDIMENT TANK CAN NO LONGER ALLOW THIS FLOW RATE, WHEN THERE IS A TEAR, OR WHEN DIRECTED BY THE ENGINEER.

3). SEVERAL UN-CONNECTED OR CONNECTED IN PARALLEL PORTABLE SEDIMENT TANKS MAY BE USED WHEN A HIGHER FLOW RATE IS NEEDED TO DE-WATER THE JOB.

4). OTHER DESIGNS MAY BE USED PROVIDED THE HYDRAULIC DESIGN IS SUBMITTED TO AND APPROVED BY THE STORMWATER ENGINEER.

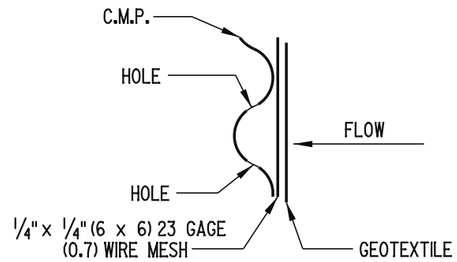

SECTION B-B

DELAWARE DEPARTMENT OF TRANSPORTATION	PORTABLE SEDIMENT TANK		APPROVED Carolann Wicks CHIEF ENGINEER 12/5/05 DATE
	STANDARD NO. E-24 (2005)	SHT. 1 OF 1	RECOMMENDED [signature] DESIGN ENGINEER 11/29/05 DATE

09/08/2005

SCALE : N.T.S.

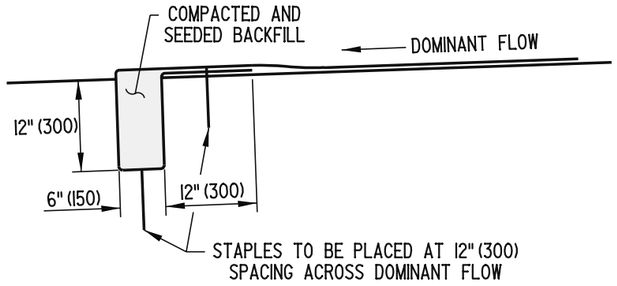

INITIAL TRENCH ANCHOR DETAIL

APPLIED AT THE DOWNSTREAM END OF DITCH

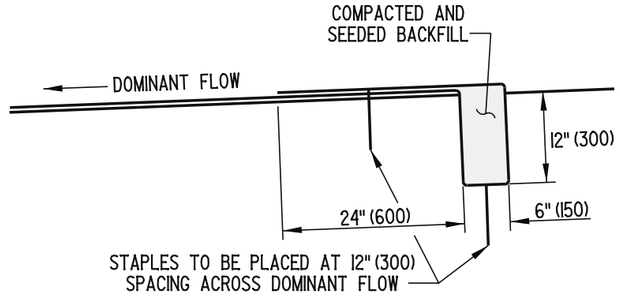

TERMINAL TRENCH ANCHOR DETAIL

APPLIED AT THE UPSTREAM END OF DITCH

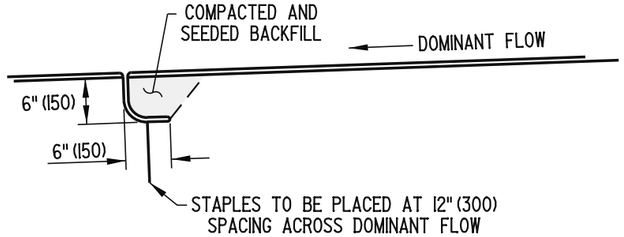

CHECK SLOT DETAIL

(AS NEEDED PER PLANS)

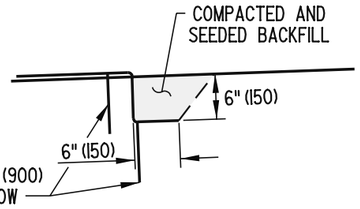

LONGITUDINAL TRENCH ANCHOR DETAIL

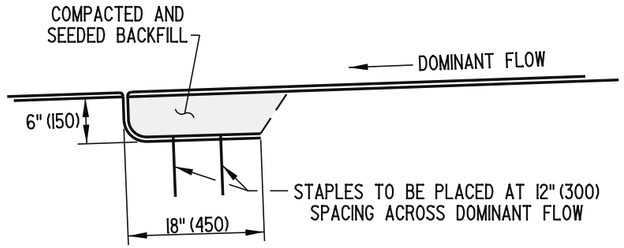

OVERLAP DETAIL

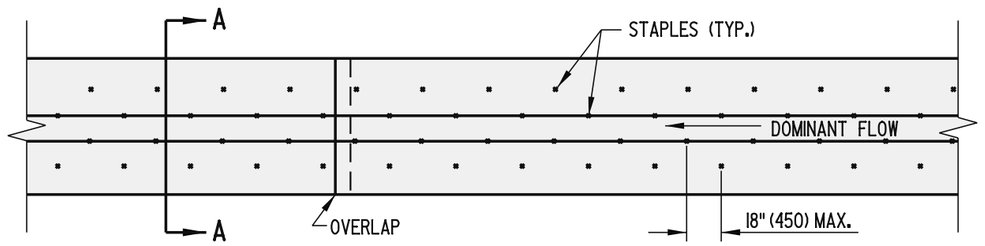

STABILIZATION OF DITCHES PLAN

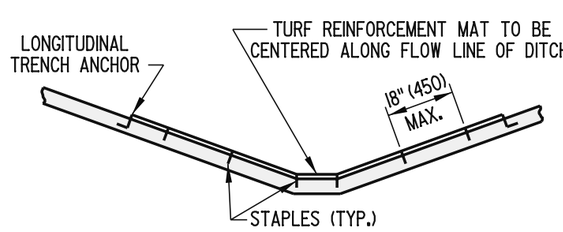

STABILIZATION OF DITCHES SECTION A-A

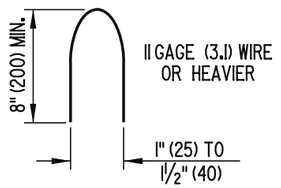

STAPLE DETAIL

NOTES: 1. ADDITIONAL STAPLES NOT SHOWN ARE REQUIRED AT OVERLAPS, ENDS, CHECK SLOTS AND EDGES. SEE APPROPRIATE DETAILS FOR STAPLE PLACEMENT.
2. STAPLES ARE TO BE STAGGERED.
3. TOPSOIL UNDER TURF REINFORCEMENT MAT IS TO BE TRACKED AND SEEDED.

DELAWARE DEPARTMENT OF TRANSPORTATION	TURF REINFORCEMENT MAT APPLICATIONS		APPROVED Carolann Wicks CHIEF ENGINEER 12/5/05 DATE
	STANDARD NO. E-25 (2005)	SHT. 1 OF 1	RECOMMENDED James M. O'Neill DESIGN ENGINEER 11/29/05 DATE

09/08/2005

SCALE : N.T.S.

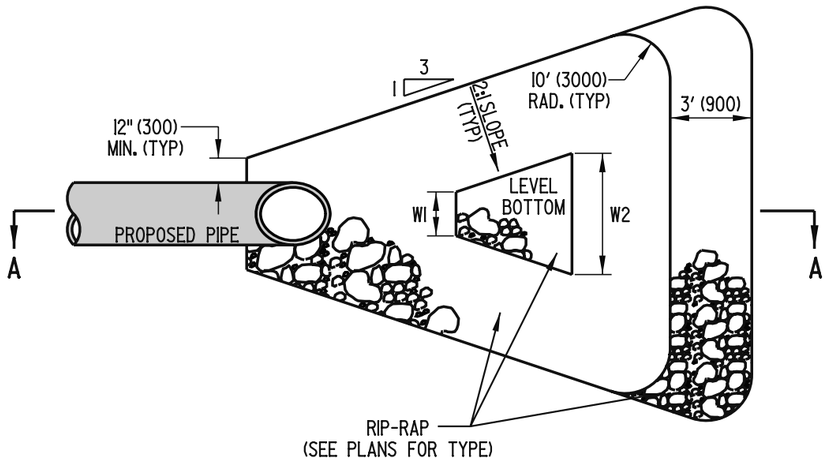

PLAN VIEW

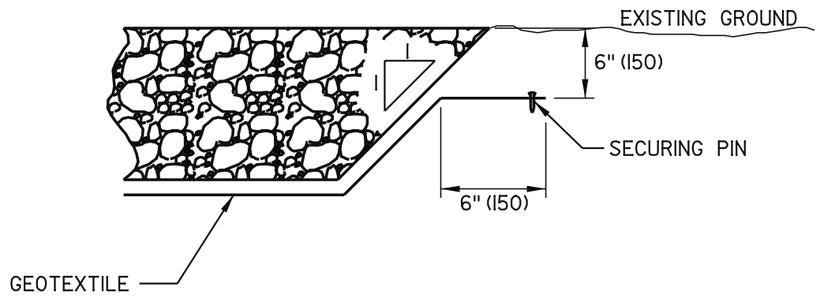

DETAIL B

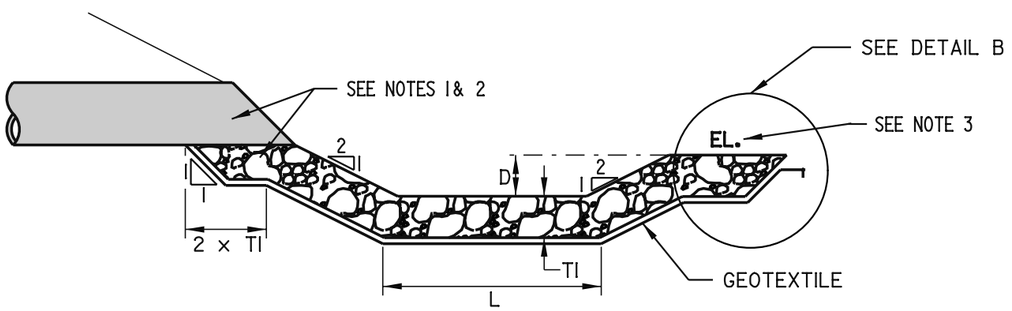

SECTION A-A

NOTES:

1. RIPRAP IS TO BE PLACED PRIOR TO PLACING PIPE.
2. PLACE DELAWARE NO. 3 STONE UNDER PIPE.
3. ELEVATION (EL.) SHOULD NOT BE HIGHER THAN PIPE INVERT.
4. REFER TO THE PIPE ENERGY DISSIPATOR SCHEDULE ON THE CONSTRUCTION PLANS FOR THE VALUE OF DIMENSION VARIABLES.

DELAWARE DEPARTMENT OF TRANSPORTATION	RIPRAP ENERGY DISSIPATOR DETAIL		APPROVED CHIEF ENGINEER	10/10/06 DATE
	STANDARD NO. E-26 (2006)	SHT. 1 OF 1	RECOMMENDED DESIGN ENGINEER	10/9/06 DATE

08/04/2006

SCALE : N.T.S.

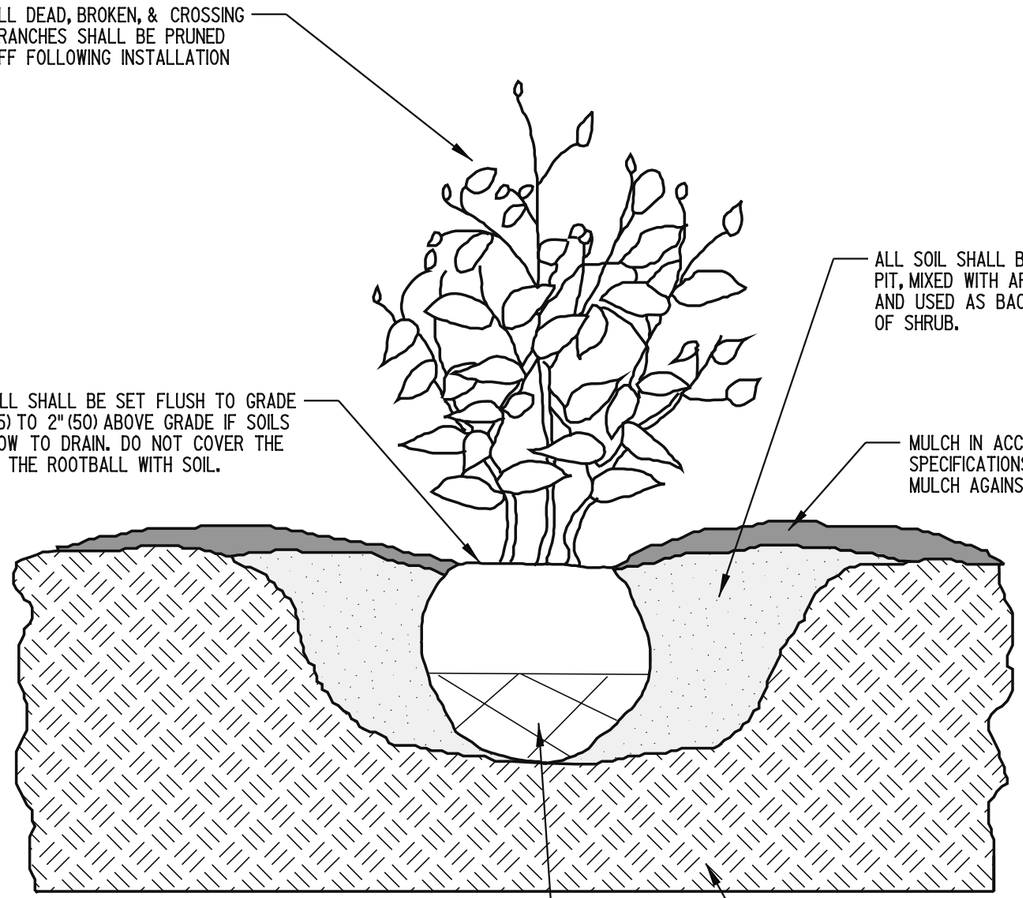

NOTES:

1). BASE OF PLANTING PIT SHALL BE A MINIMUM WIDTH OF TWICE THE ROOT BALL SIZE AND A MAXIMUM OF THREE TIMES THE ROOT BALL SIZE.
2). SHRUBS SHALL BE INSTALLED IN MASSES OF NO LESS THAN 3 PLANTS. A MINIMUM OF 6' (1800) WIDTH IS REQUIRED FROM THE BACK OF CURB TO THE EDGE OF SIDEWALK FOR INSTALLATION OF SHRUBS.
3). ALL PRUNING SHALL BE DONE BY AN I.S.A. CERTIFIED ARBORIST, CERTIFIED NURSERY PROFESSIONAL, OR UNDER THE DIRECTION THEREOF. DO NOT HEAVILY PRUNE SHRUBS AT PLANTING.
4). AUGERED HOLES SHALL BE HAND DUG TO FINAL WIDTH AND TO ELIMINATE GLAZING.
5). ALL SHRUB MASSES SHALL BE MULCHED AS ONE CONTINUOUS BED.

ROADSIDE SHRUB PLANTING DETAIL

DELAWARE DEPARTMENT OF TRANSPORTATION	PLANTING DETAILS		APPROVED CHIEF ENGINEER — DATE 10/10/06
	STANDARD NO. L-1 (2006)	SHT. 1 OF 3	RECOMMENDED DESIGN ENGINEER — DATE 10/9/06

08/04/2006

SCALE : N.T.S.

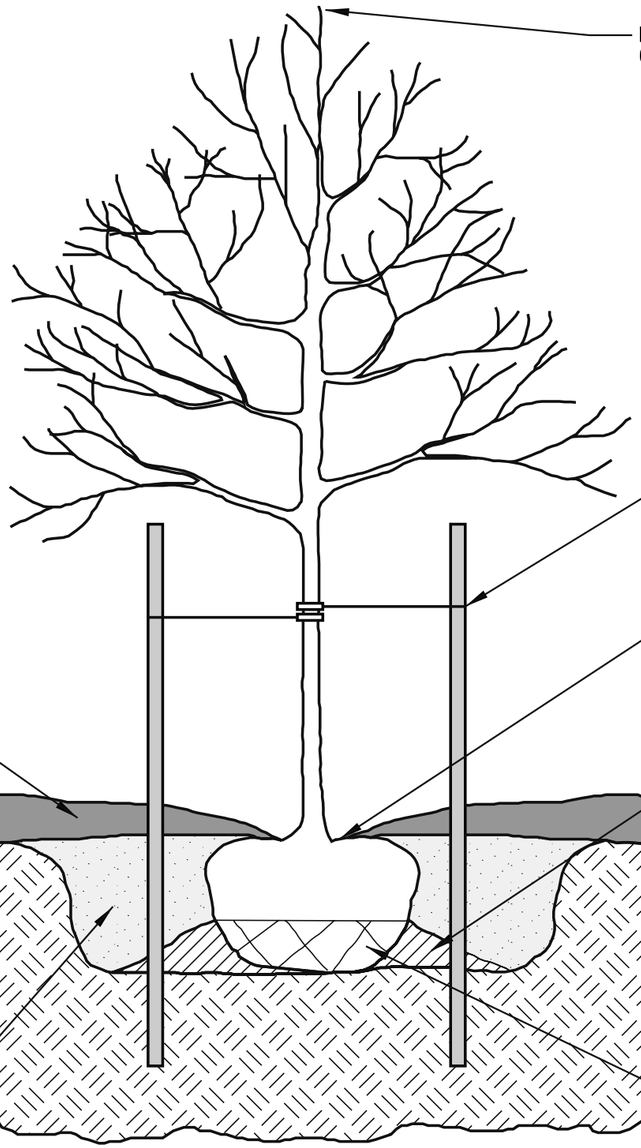

DO NOT PRUNE THE DOMINANT LEADER OR TERMINAL BUDS OF THE CROWN.

STAKE & GUY TREES. GUY WIRE, STAKES, & RUBBER HOSE SHALL BE AS SPECIFIED IN SECTION 737.

SET ROOT BALL FLUSH TO GRADE OR 1" (25) TO 2" (50) ABOVE GRADE IF SOILS ARE SLOW TO DRAIN. PLANT TREES SUCH THAT THE TRUNK FLARE IS VISIBLE. ANY TREE WHERE TRUNK FLARE IS NOT VISIBLE SHALL BE REJECTED. DO NOT COVER THE TOP OF THE ROOT BALL WITH SOIL.

MULCH IN ACCORDANCE WITH SPECIFICATIONS. DO NOT PLACE MULCH AGAINST THE TRUNK.

TAMP SOIL AROUND THE ROOT BALL BASE WITH FOOT PRESSURE SO ROOT BALL DOES NOT SHIFT.

ALL SOIL SHALL BE EXCAVATED FROM THE PIT, MIXED WITH APPROVED AMENDMENTS AS PER SPECIFICATIONS AND USED AS BACKFILL DURING INSTALLATION OF TREES. PLACE ROOT BALL ON TAMPED OR UNEXCAVATED SOIL.

REMOVE BURLAP AND BASKETS TO 1/2 OF THE ROOT BALL. DO NOT BURY EXCESS BURLAP, ROPE OR REMNANTS OF BASKET IN THE PLANTING PIT.

NOTES

1). ALL PRUNING SHALL BE DONE BY OR UNDER THE DIRECTION OF, AN I.S.A. CERTIFIED ARBORIST OR CERTIFIED NURSERY PROFESSIONAL. DO NOT HEAVILY PRUNE TREES AT PLANTING.
2). ALL DEAD, BROKEN, & CROSSING BRANCHES SHALL BE PRUNED OFF FOLLOWING INSTALLATION.
3). BASE OF PLANTING PIT SIZE SHALL BE A MINIMUM WIDTH OF TWICE THE ROOT BALL SIZE AND A MAXIMUM OF THREE TIMES THE ROOT BALL SIZE.
4). WHEN PLANTING TREES ALONG STREETS, THERE MUST BE A MINIMUM OF 6' (1800) BETWEEN THE BACK OF CURB AND THE EDGE OF SIDEWALK AND SHALL BE CENTERED BETWEEN THE BACK OF CURB AND THE EDGE OF SIDEWALK.
5). WHEN PLANTING TREES ALONG SIDEWALKS, THE TREE SHALL BE LIMBED TO 7' (2100) FOR PEDESTRIAN CLEARANCE.

TREE PLANTING DETAIL

DELAWARE DEPARTMENT OF TRANSPORTATION	PLANTING DETAILS			APPROVED CHIEF ENGINEER	DATE 10/10/06
	STANDARD NO. L-1 (2006)	SHT. 2 OF 3		RECOMMENDED DESIGN ENGINEER	DATE 10/9/06

08/04/2006

SCALE : N.T.S.

NOTE:
1). SEE PLANT LIST FOR SPACING (X).

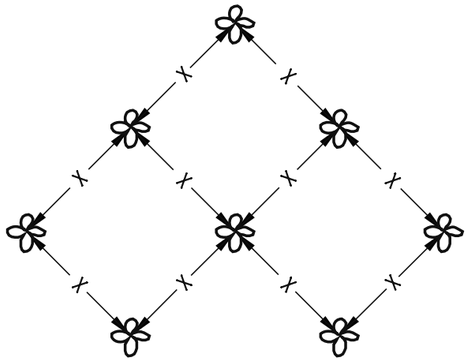

PLAN VIEW

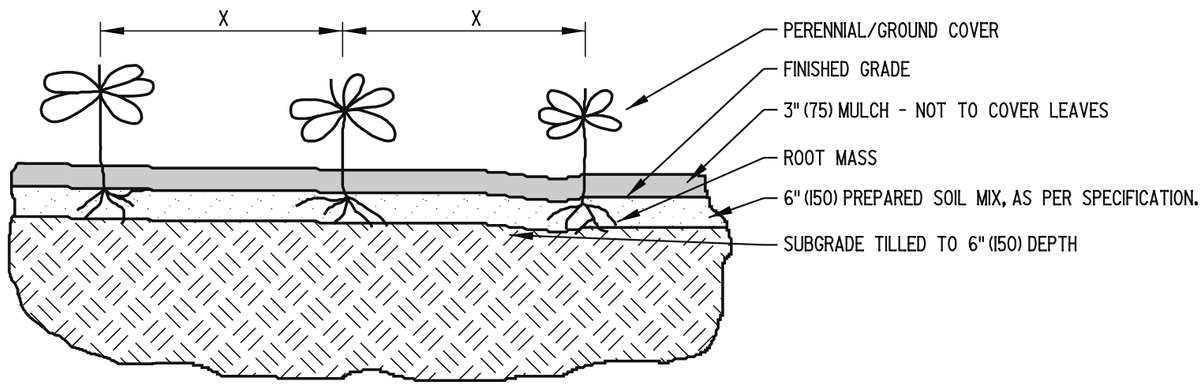

SECTION VIEW

PERENNIAL/GROUNDCOVER PLANTING DETAIL

DELAWARE DEPARTMENT OF TRANSPORTATION	PLANTING DETAILS		APPROVED CHIEF ENGINEER — DATE 10/10/06
	STANDARD NO. L-1 (2006)	SHT. 3 OF 3	RECOMMENDED DESIGN ENGINEER — DATE 10/9/06

06/27/2006

SCALE : N.T.S.

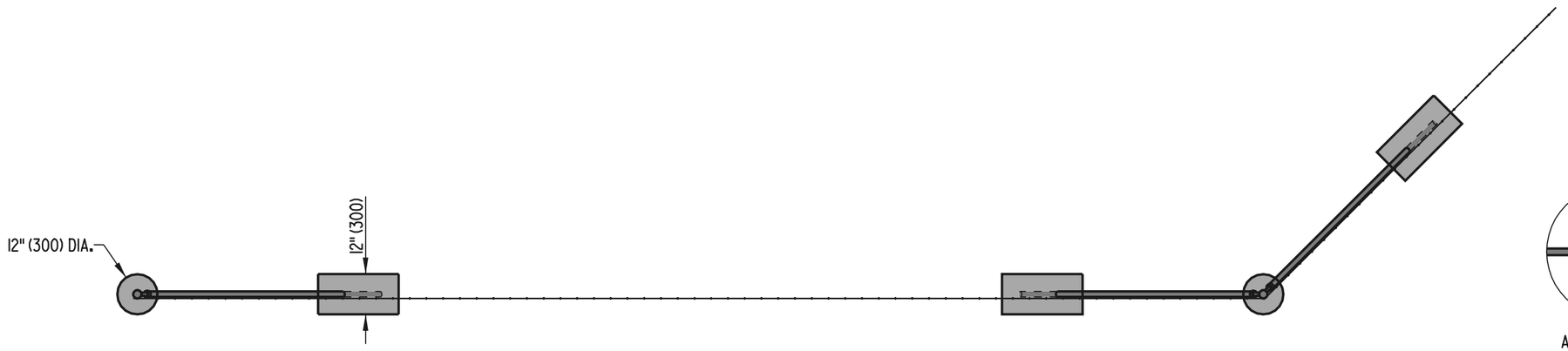

TOP VIEW

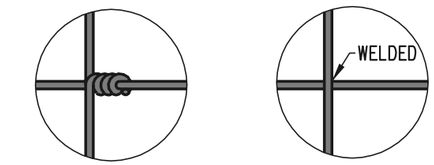

ALTERNATE METHODS OF SECURING VERTICAL
STAY WIRES TO THE HORIZONTAL WIRES OF THE FABRIC.

DEATAIL 'A'

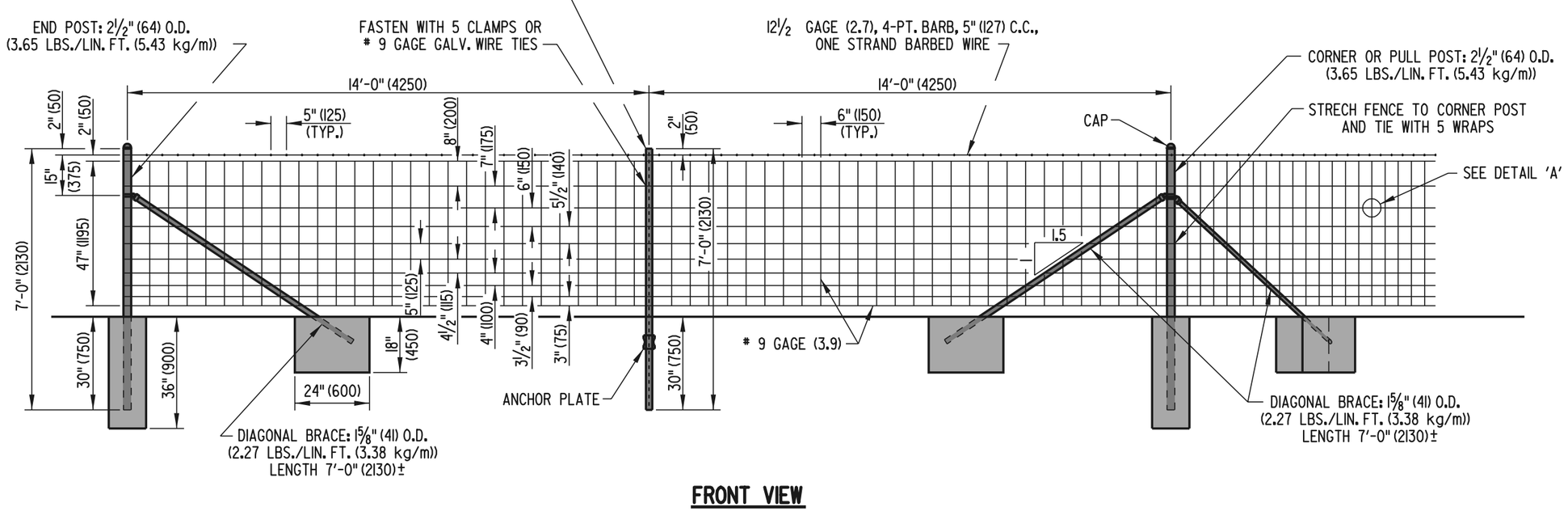

FRONT VIEW

DELAWARE DEPARTMENT OF TRANSPORTATION	RIGHT-OF-WAY FENCE	APPROVED _____ CHIEF ENGINEER DATE 6/18/01
	STANDARD NO. M-1 (2001) SHT. 1 OF 1	RECOMMENDED _____ DESIGN ENGINEER DATE 6/15/01

05/21/2001

SCALE : N.T.S.

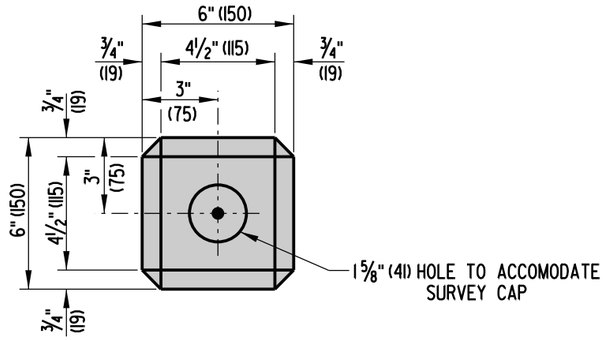

TOP

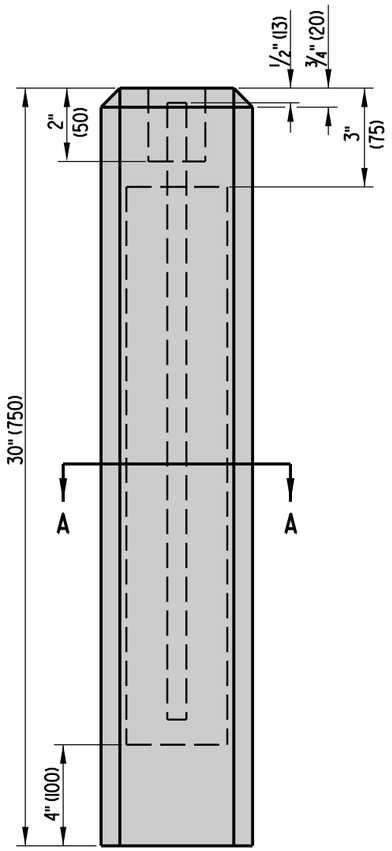

ELEVATION

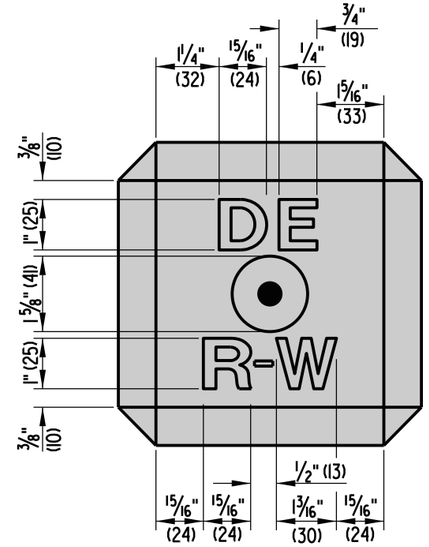

TOP DETAIL

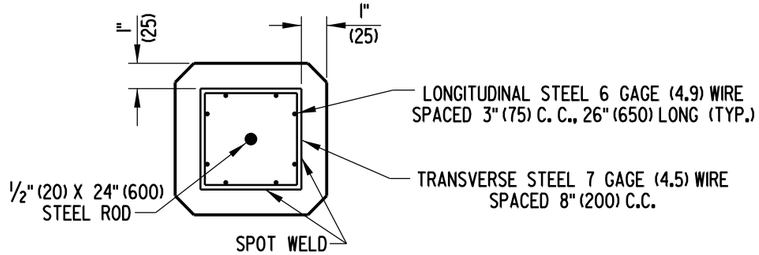

SECTION A-A

NOTES : 1. LONGITUDINAL STEEL SHALL BE HELD IN PLACE BY CRADLES.
2. LETTERS TO BE COUNTERSUNK IN TOP OF MARKER ¼" (6).

DELAWARE DEPARTMENT OF TRANSPORTATION	CONCRETE MONUMENT		APPROVED CHIEF ENGINEER	11/18/08 DATE
	STANDARD NO. M-2 (2008)	SHT. 1 OF 1	RECOMMENDED DESIGN ENGINEER	11/17/08 DATE

07/28/2008

SCALE : N.T.S.

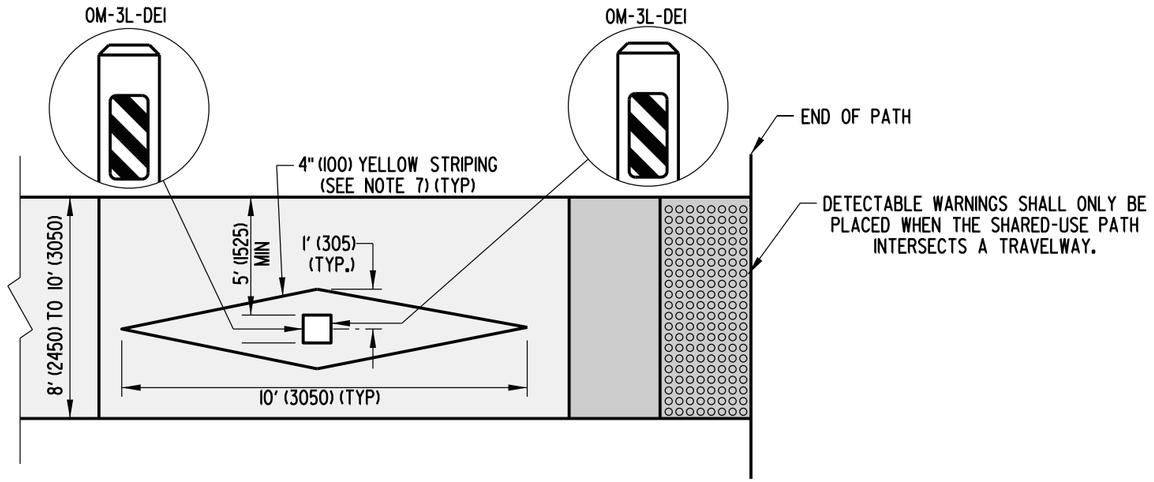

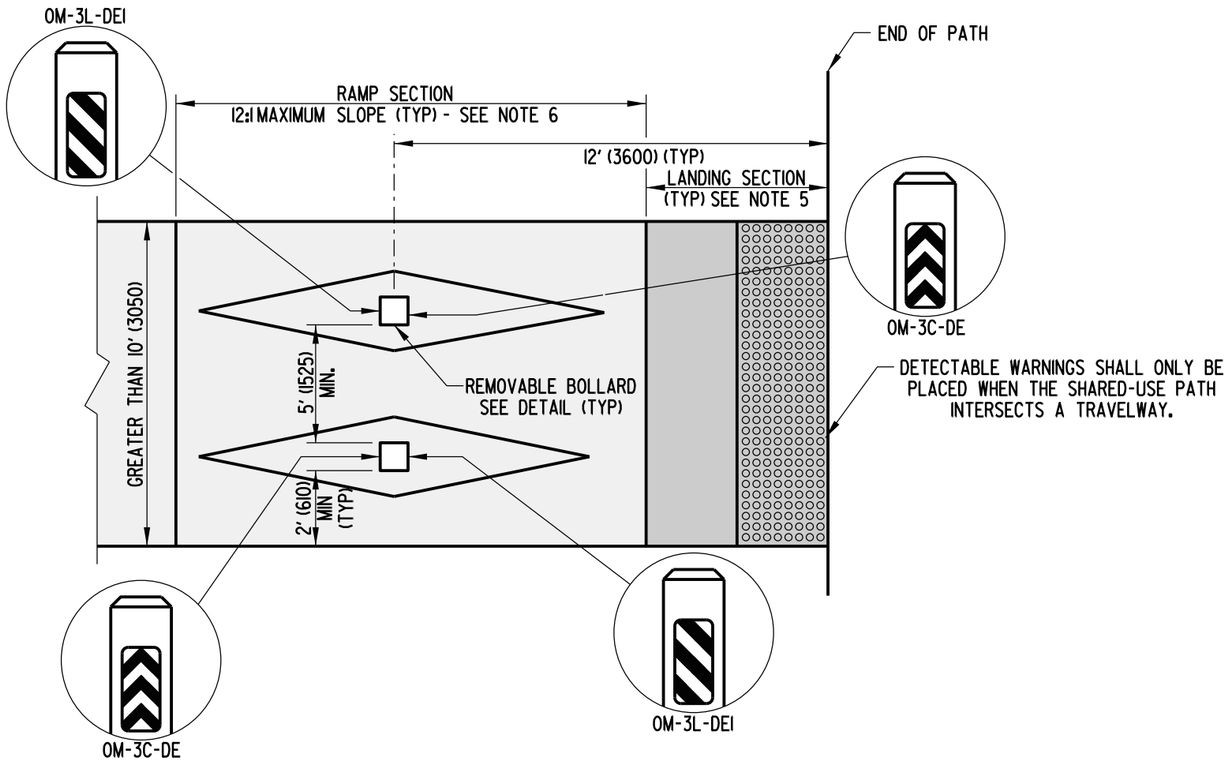

SHARED-USE PATH INTERSECTION

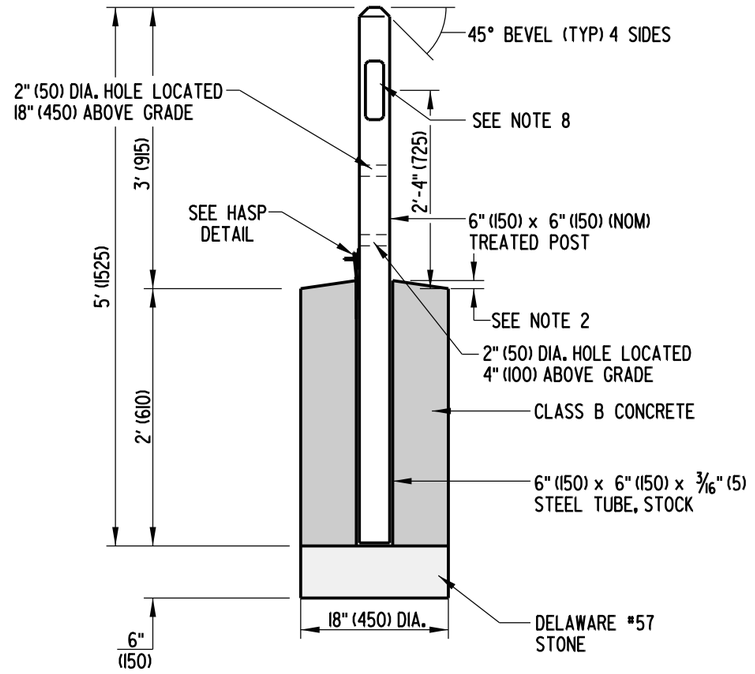

REMOVABLE BOLLARD

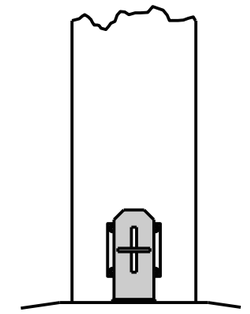

HASP DETAIL

LOWER PORTION OF HASP SHALL BE WELDED TO STEEL TUBE.

NOTES:

1). IF THE SHARED-USE PATH ENDS AT A ROADWAY OR RAILROAD CROSSING, THEN DETECTABLE WARNING TRUNCATED DOMES 24" (600) LONG AND THE FULL WIDTH OF THE PATH SHALL BE INSTALLED. SEE DETAIL C-2.
2). STEEL TUBE TO EXTEND ½" (13) ABOVE GROUND WITH CONCRETE TO SLOPE AWAY FROM TUBE TO KEEP WATER AND SEDIMENT FROM DRAINING INTO TUBE.
3). BOLLARDS ARE NOT REQUIRED FOR A SHARED-USE PATH LESS THAN 8' (2450) WIDE.
4). SHAVE THE POST AS NECESSARY SO THAT IT WILL FIT IN THE STEEL TUBE.
5). THE LANDING SECTION SHALL BE A MINIMUM OF 5' (1525) IN LENGTH AND SHALL HAVE A MAXIMUM CROSS SLOPE AND RUNNING SLOPE OF 2%. THE ENTIRE LANDING SECTION MUST ALSO BE CONCRETE.
6). THE RAMP SECTION SHALL HAVE A MAXIMUM CROSS SLOPE OF 2%. IT SHALL ALSO HAVE A MAXIMUM RUNNING SLOPE OF 12:1. HOWEVER, IF A 12:1 RUNNING SLOPE DOES NOT ALLOW THE RAMP TO MEET EXISTING GRADE WITHIN 15' (4200), THE RUNNING SLOPE MAY EXCEED 12:1.
7). STRIPING MATERIAL TO BE DETERMINED BY THE ENGINEER BASED ON THE MATERIAL THAT THE STRIPING IS BEING PLACED ON.
8). THE APPROPRIATE TYPE 3 OBJECT MARKER SHALL BE PLACED ON THE FRONT AND BACK OF EACH BOLLARD AS PER THIS DETAIL.

DELAWARE DEPARTMENT OF TRANSPORTATION	BOLLARD & SHARED-USE PATH DETAILS		APPROVED SIGNATURE ON FILE (CHIEF ENGINEER) 01/19/2010 (DATE)
	STANDARD NO. M-3 (2009)	SHT. 1 OF 1	RECOMMENDED SIGNATURE ON FILE (DESIGN ENGINEER) 01/14/2010 (DATE)

01/06/2010

SCALE : N.T.S.

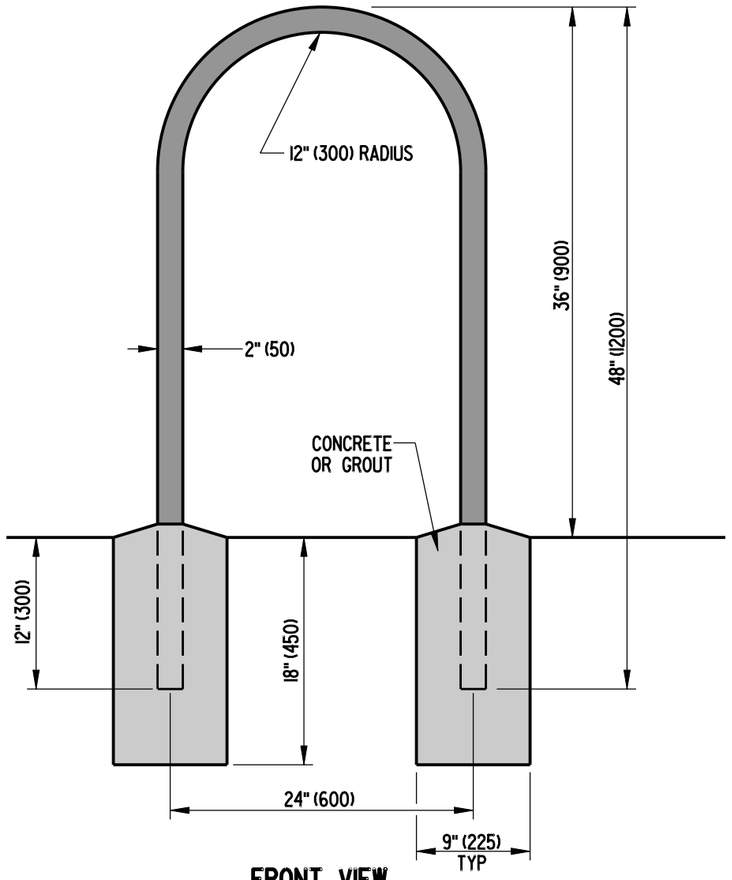

FRONT VIEW

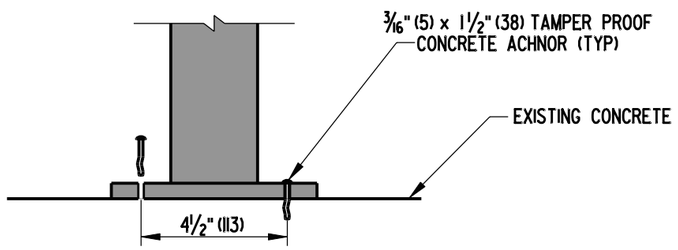

ALTERNATE ANCHOR OPTION
SECTION VIEW

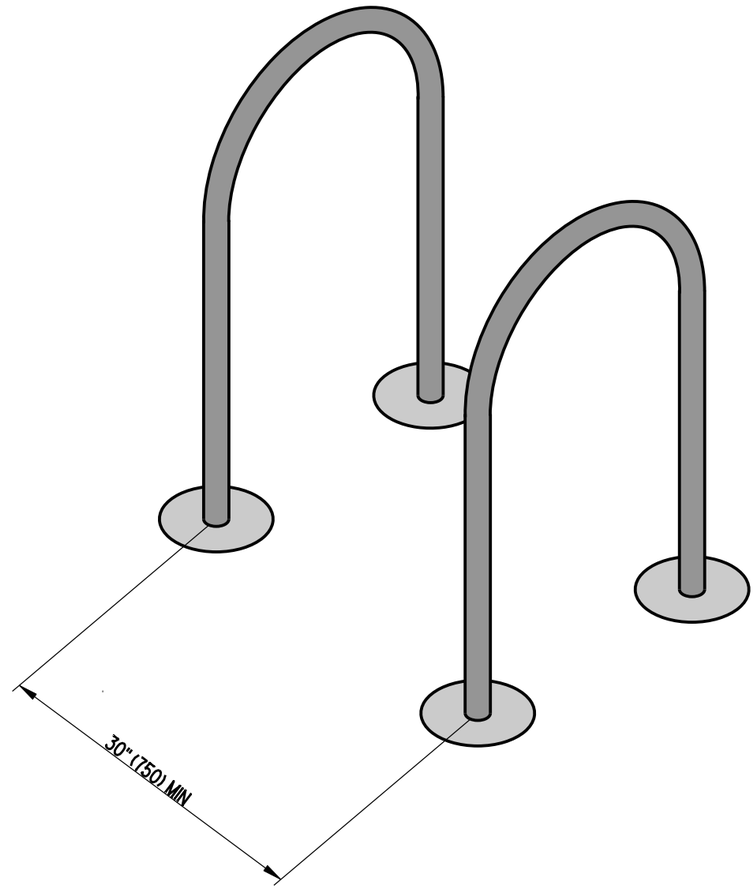

ISOMETRIC VIEW
4 BIKE INSTALLATION

DELAWARE DEPARTMENT OF TRANSPORTATION	BIKE RACK DETAILS		APPROVED CHIEF ENGINEER 10/24/07 DATE
	STANDARD NO. M-4 (2007)	SHT. 1 OF 1	RECOMMENDED DESIGN ENGINEER 10/23/07 DATE

04/03/2007

SCALE : N.T.S.

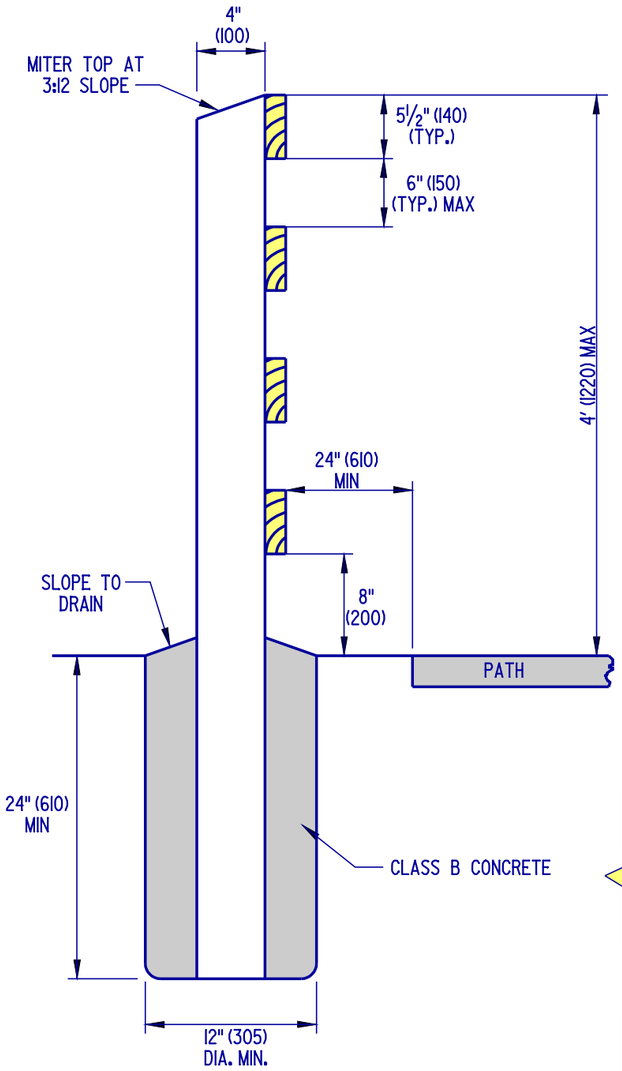

SECTION A-A

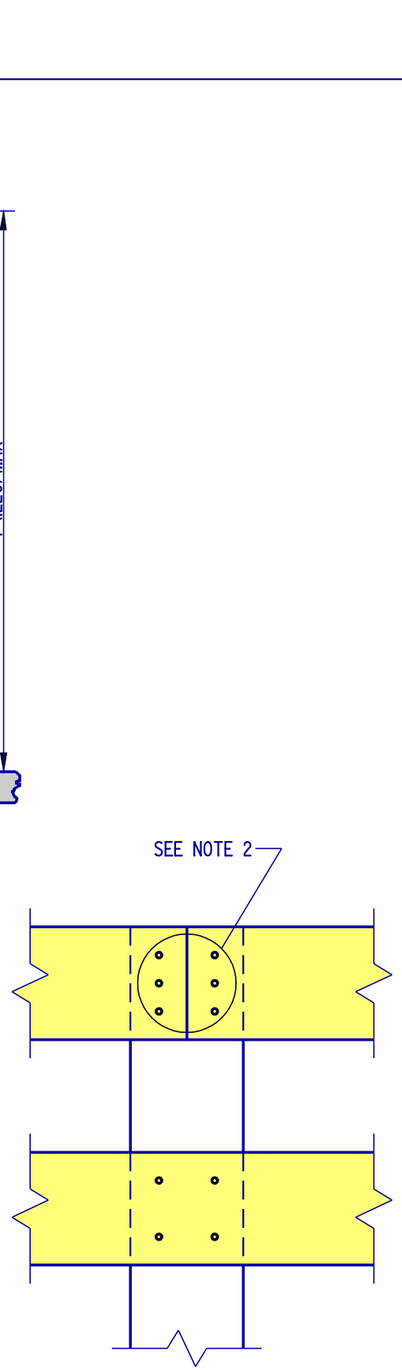

TYPICAL JOINT DETAIL

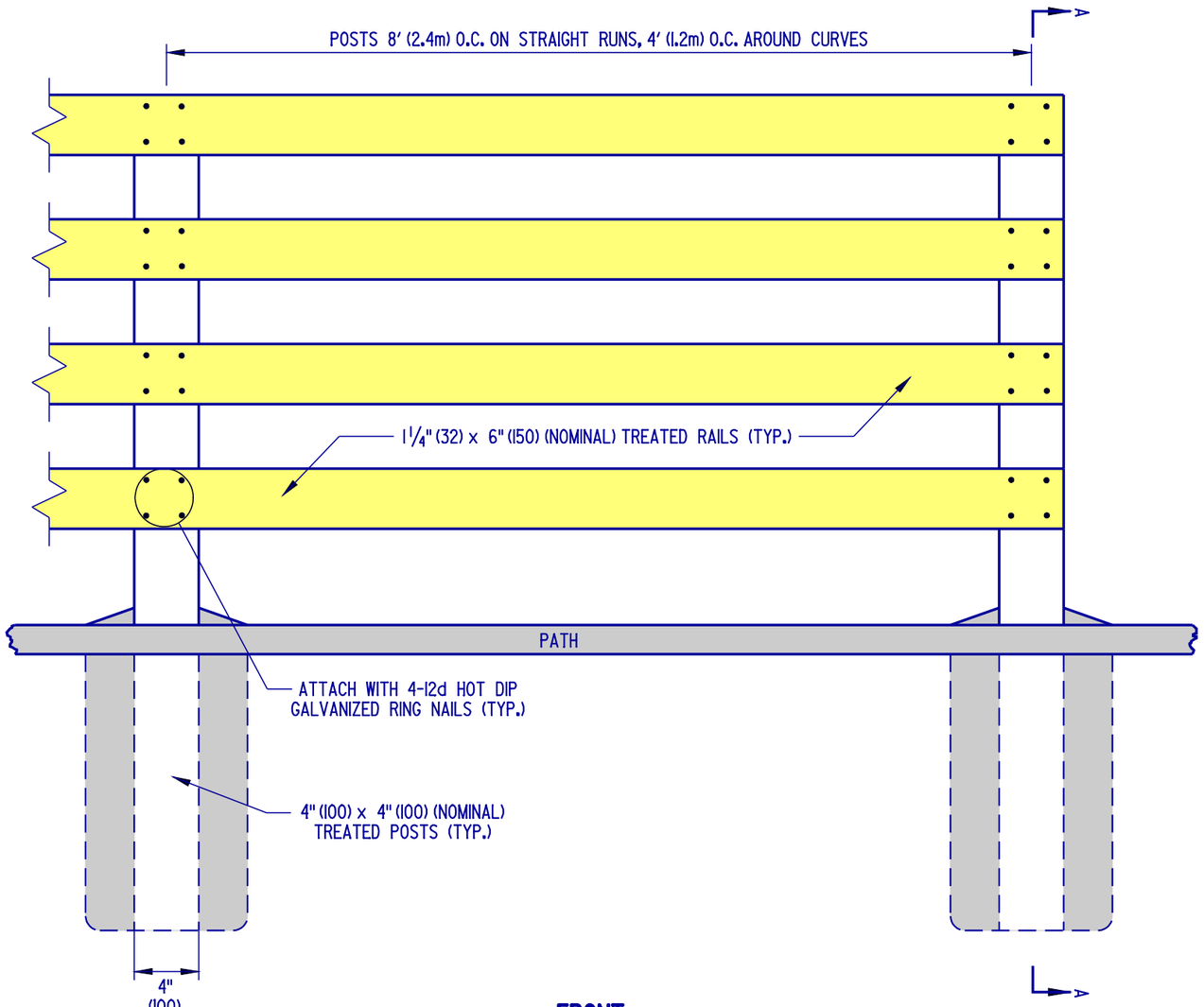

FRONT

NOTES:
1. ALL RAIL JOINTS SHALL BE CENTERED AT THE POSTS.
2. ALL JOINTS SHALL BE ATTACHED WITH 3 - 12d NAILS AND TWO ADJACENT RAILS SHALL NOT END ON THE SAME POST.
3. RAILS SHALL BE FLUSH TO THE POSTS AT THE END POSTS.

DELAWARE DEPARTMENT OF TRANSPORTATION	WOOD RAIL FENCE DETAILS		APPROVED Carolann Wicks CHIEF ENGINEER 1/10/05 DATE
	STANDARD NO. M-5 (2004)	SHT. 1 OF 1	RECOMMENDED Dennis M. O'Toole DESIGN ENGINEER 1/3/05 DATE

09/27/2004

SCALE : N.T.S.

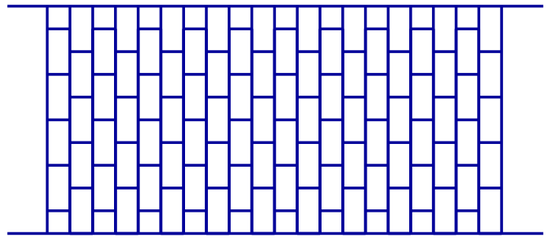

4" (100) x 8" (200) RUNNING BOND PATTERN

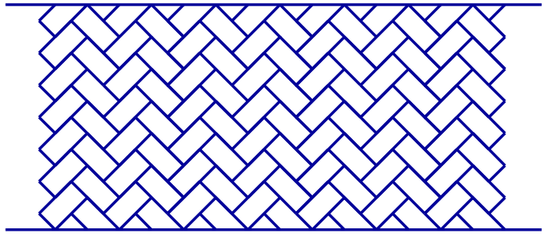

4" (100) x 8" (200) HERRINGBONE PATTERN

NOTES:

1. ACTUAL PATTERN TO BE USED SHALL BE SPECIFIED ON THE PLANS. COLOR IS TO BE "BRICK RED" UNLESS OTHERWISE NOTED ON THE PLANS.
2. MATERIALS AND PAVEMENT BOX VARY DEPENDING ON PLANS.
3. FOR CROSSWALK APPLICATIONS, 8" (200) WHITE LINES SHOULD BE PLACED ON BOTH SIDES.
4. THE PATTERNS ABOVE ARE THE PREFERRED PATTERNS AVAILABLE FOR SIDEWALK OR CROSSWALK APPLCATIONS.

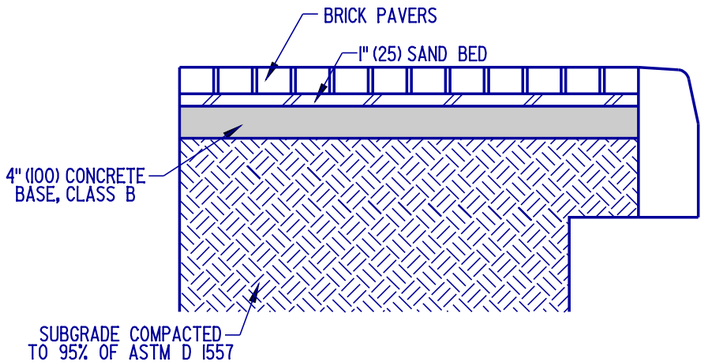

BRICK PAVER SIDEWALK DETAIL

NOTES:

1. ALL PAVERS ARE TO BE "BRICK RED" UNLESS OTHERWISE SPECIFIED ON THE PLANS. THE PATTERN SHALL BE SPECIFIED ON THE PLANS.
2. EXPANSION JOINT MAY BE NEEDED ON NON-CURB SIDE OF BRICK PAVER SIDEWALK IF THAT SIDE IS AGAINST BUILDING OR OTHER CONFINING FEATURE.

DELAWARE
DEPARTMENT OF TRANSPORTATION

PATTERNED HOT-MIX OR CONCRETE & BRICK PAVER DETAILS

STANDARD NO. M-6 (2004) | SHT. 1 OF 1

APPROVED Carolann Wicks CHIEF ENGINEER 1/10/05 DATE

RECOMMENDED Dennis M. Office DESIGN ENGINEER 1/3/05 DATE

09/24/2004

SCALE : N.T.S.

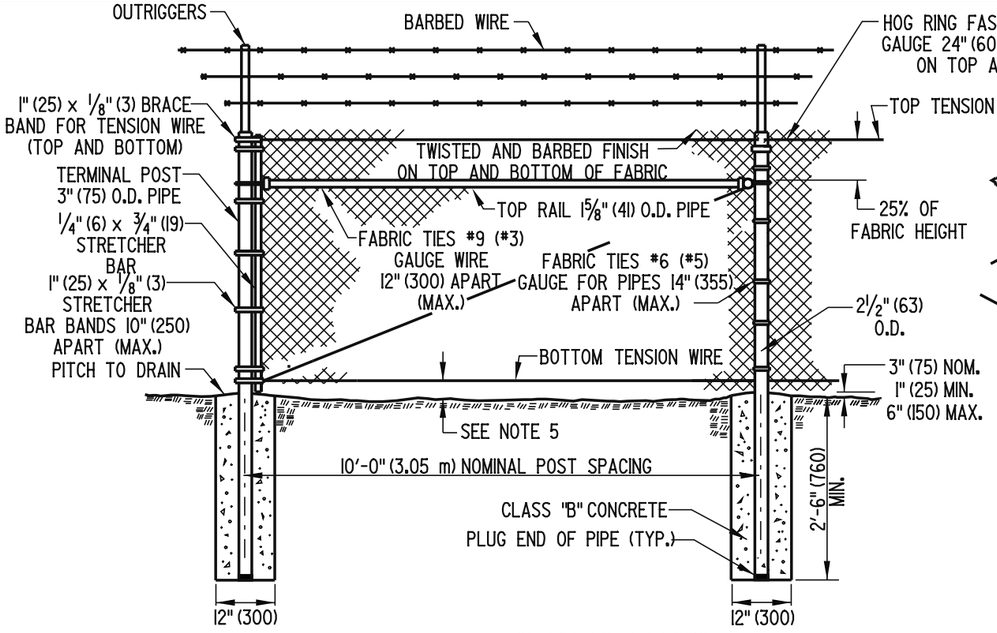

CHAIN-LINK FENCE

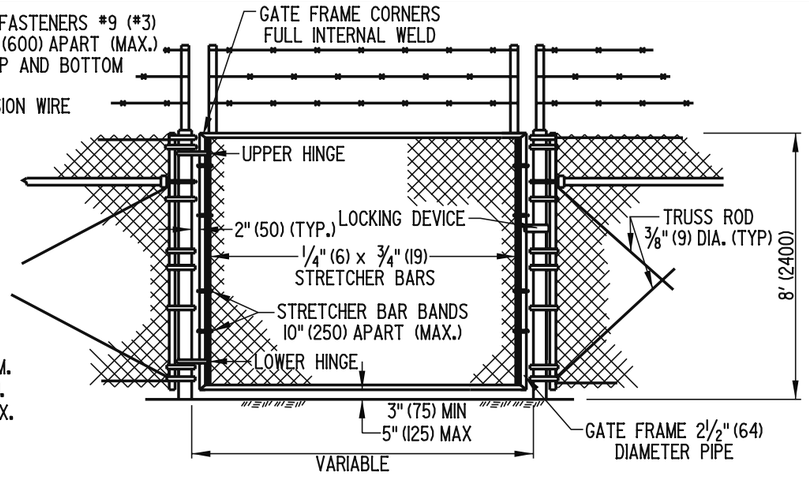

GATES, CHAIN-LINK FENCE

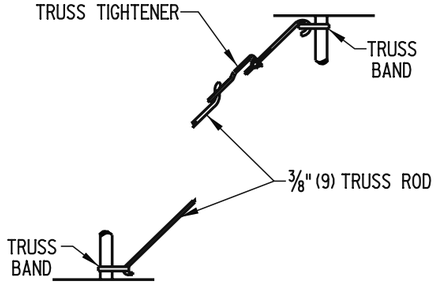

3/8" (9) TRUSS ROD ASSEMBLY

CHAIN-LINK FENCE ASSEMBLIES

TENSION WIRE CONNECTION AT ROUND INTERMEDIATE OR CORNER POST

GENERAL NOTES

1). POSTS

	TERMINAL, CORNER AND GATE POSTS	LINE POSTS	TOP OR BRACE RAIL
	3" (75) O.D. PIPE	2 1/2" (64) O.D. PIPE	1 5/8" (41) O.D. PIPE
AASHTO TYPE	I OR II	I OR II	I OR II
AASHTO GRADE	I OR 2	I OR 2	I OR 2
MINIMUM LENGTH OF POST:	10'-8" (3250)	10'-8" (3250)	N/A
ACTUAL OUTSIDE DIAMETER	2 7/8" (73)	2 3/8" (60)	1.660" (42)
WALL THICKNESS	GRADE 1 = .203" (5.2) GRADE 2 = .160" (4)	GRADE 1 = .154" (3.9) GRADE 2 = .120" (3)	GRADE 1 = .140" (3.5) GRADE 2 = .111" (2.8)

2). THE DEPTH OF CONCRETE FOOTERS IN SOLID ROCK MAY BE REDUCED TO 12" (300) BELOW THE TOP OF ROCK AND THE DIAMETER OF THE HOLE IN ROCK MAY BE REDUCED TO 6" (150).
3). BRACE BANDS AND STRETCHER BAR BANDS SHALL BE FURNISHED WITH 5/16" (8) DIA. CARRIAGE BOLTS AND ELASTIC STOP NUTS.
4). DRIVE ANCHOR SHOE ASSEMBLY ONLY TO BE USED IN WET AREAS AND WITH PRIOR APPROVAL OF THE ENGINEER.
5). THE BOTTOM OF THE FENCE SHALL BE 2" (50) MAX ABOVE HARD GROUND OR PAVEMENT. WHERE THERE IS SOFT GROUND, THE BOTTOM OF THE FENCE SHALL EXTEND INTO THE GROUND IN ORDER TO BE FIRM DUE TO SHIFTING SOIL OR SAND.
6). NUTS AND BOLTS SHALL BE TACK WELDED OR BURRED TO PREVENT REMOVAL.
7). IF THERE ARE ANY OPENINGS IN THE FENCE LARGER THAN 96 SQ. IN. (620 sq. cm) DUE TO UTILITIES OR GRADED TERRAIN, THE OPENINGS SHALL BE SECURED WITH A METAL GRILL THAT IS LOCKED OR PERMANENTLY WELDED.
8). VEGETATION AND PERMANENT STRUCTURES (SUCH AS BUILDINGS, LIGHT POLES, AND UTILITY POLES) SHALL BE AT LEAST 14' (4.2 m) FROM THE FENCE. ANY EXCEPTIONS SHALL REQUIRE THE CONSTRUCTION OF TOP GUARDS.

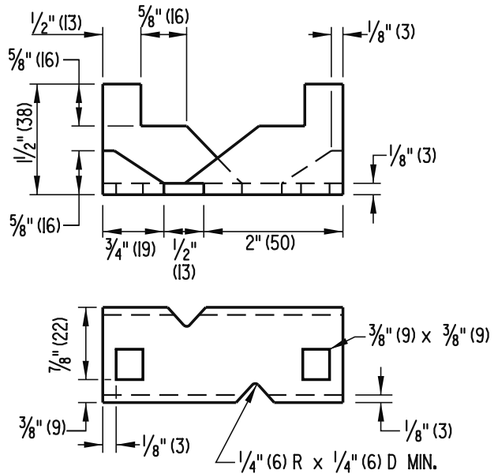

ANCHOR SHOE

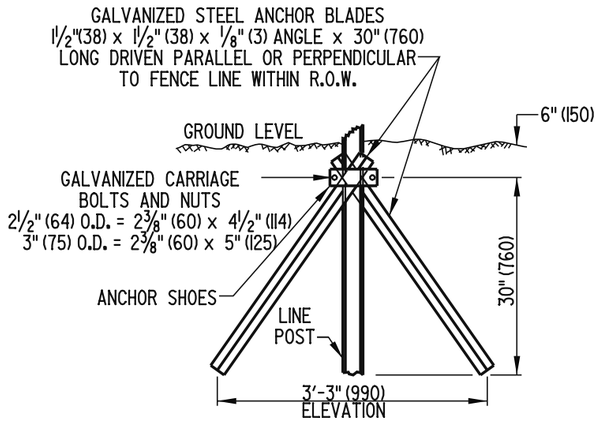

DRIVE ANCHOR SHOE ASSEMBLY

(SEE NOTE 4)

DELAWARE DEPARTMENT OF TRANSPORTATION	CHAIN LINK FENCE DETAILS		APPROVED CHIEF ENGINEER — DATE 10/10/06
	STANDARD NO. M-7 (2006)	SHT. 1 OF 1	RECOMMENDED DESIGN ENGINEER — DATE 10/9/06

06/27/2006

SCALE : N.T.S.

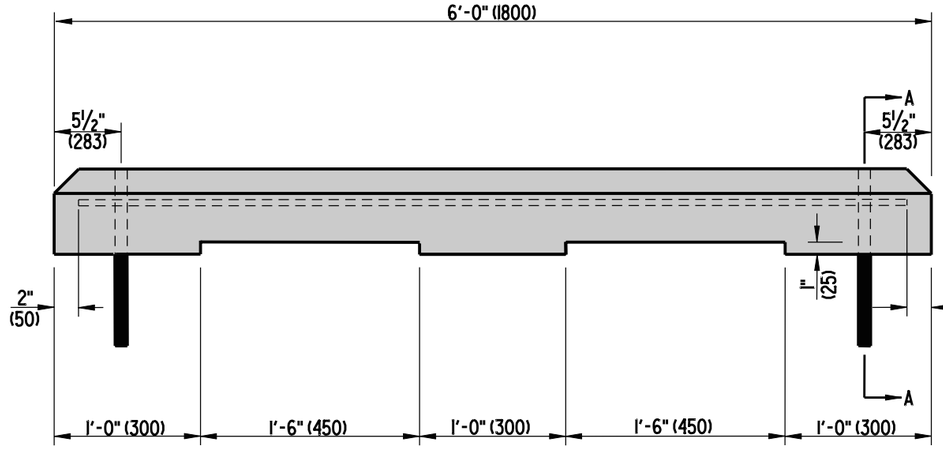

ELEVATION

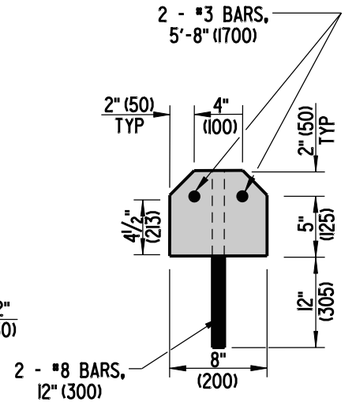

SECTION A-A

DELAWARE DEPARTMENT OF TRANSPORTATION	P.C.C. PARKING BUMPER		APPROVED _____ CHIEF ENGINEER 10/24/07 DATE
	STANDARD NO. M-8 (2007)	SHT. 1 OF 1	RECOMMENDED _____ DESIGN ENGINEER 10/23/07 DATE

08/01/2007

SCALE : N.T.S.

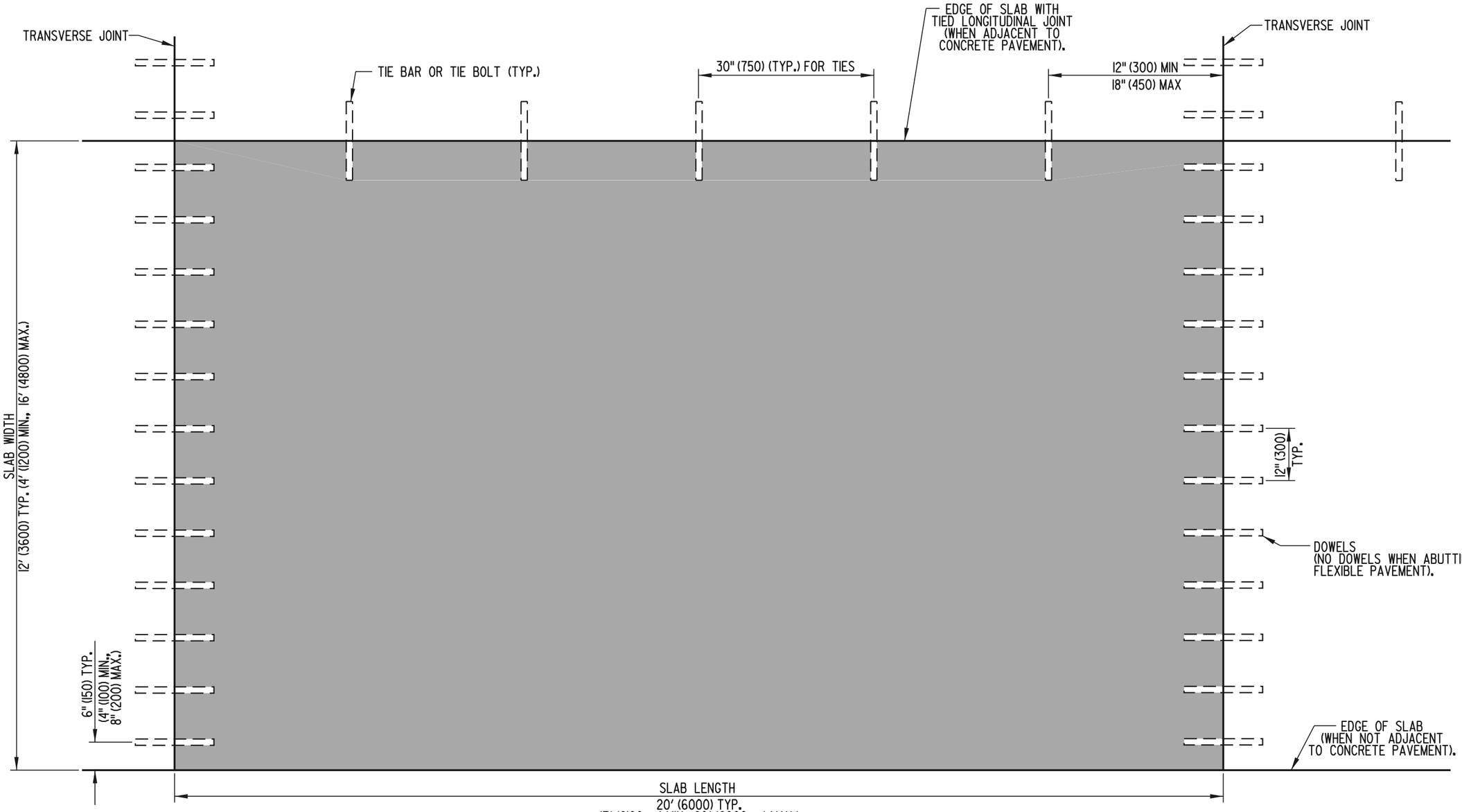

NOTES:

1). TRANSVERSE JOINTS ARE PERPENDICULAR TO THE CENTERLINE OF THE PAVEMENT WHEN THE PAVEMENT IS STRAIGHT.

2). TRANSVERSE JOINTS ARE PERPENDICULAR TO A TANGENT LINE TO THE OUTSIDE ARC OF THE PAVEMENT WHEN THE PAVEMENT IS CURVED.

3). ALIGN THE TRANSVERSE JOINTS FOR ALL ADJACENT SLABS WITH EACH OTHER.

4). ABRUPT CHANGES IN PAVEMENT WIDTH MAY OCCUR ONLY AT THE TRANSVERSE JOINT LINE; LONGITUDINAL JOINTS SHALL BE CONTINUOUS WHENEVER POSSIBLE.

5). LONGITUDINAL JOINTS SHOULD NOT BE LOCATED WITHIN PROPOSED WHEEL PATHS. THE WHEEL PATH IS GENERALLY LOCATED 2' (600) INSIDE OF THE LANE EDGELINE OR CENTERLINE.

SLAB PLAN (WITH DOWEL AND TIE LOCATIONS)

DELAWARE DEPARTMENT OF TRANSPORTATION	P.C.C. PAVEMENT		APPROVED Lynne M. Hartnett CHIEF ENGINEER 6/18/01 DATE
	STANDARD NO. P-1 (2001)	SHT. 1 OF 5	RECOMMENDED DESIGN ENGINEER 6/15/01 DATE

04/18/2001

SCALE : N.T.S.

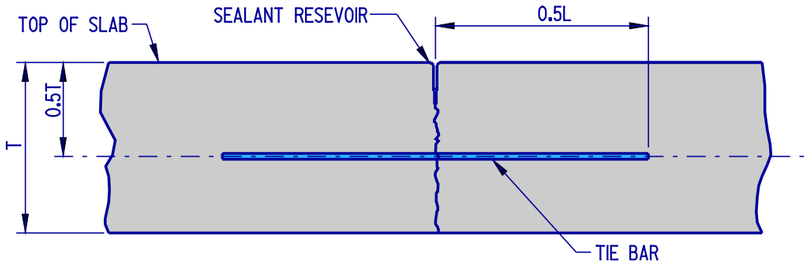

LONGITUDINAL SAW-CUT JOINT DETAIL

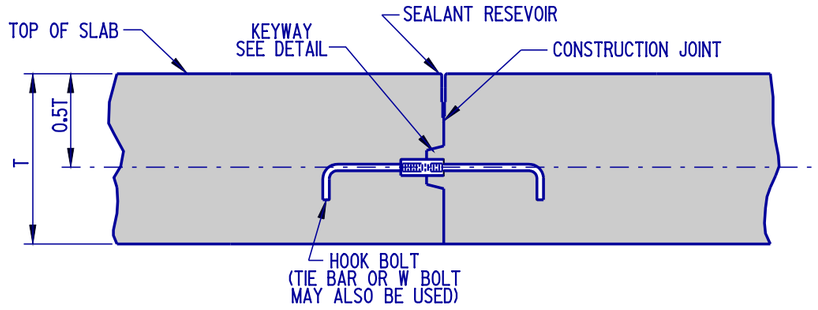

LONGITUDINAL CONSTRUCTION JOINT DETAIL

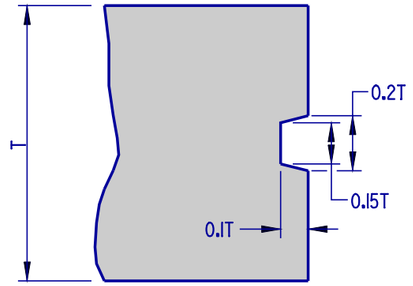

KEYWAY DETAIL

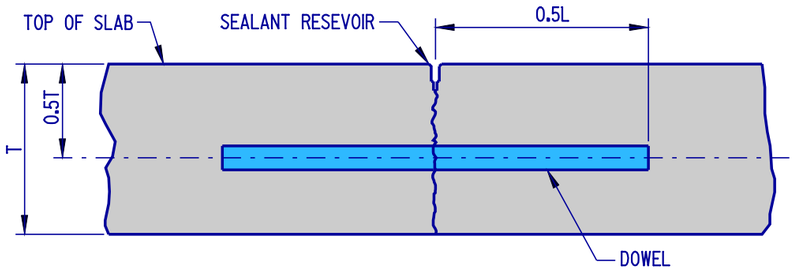

TRANSVERSE SAW-CUT JOINT DETAIL

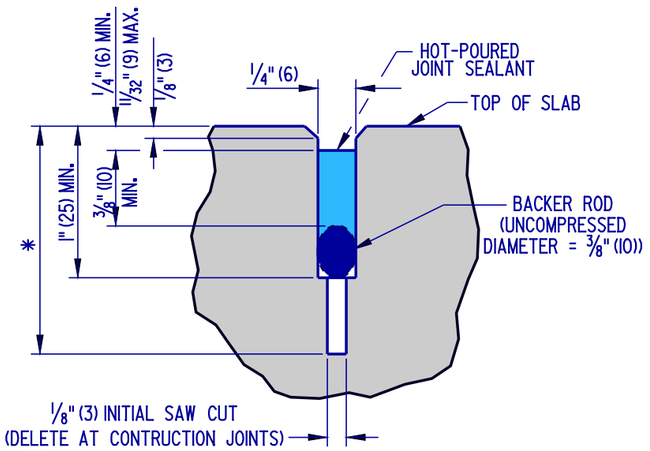

SEALANT DETAIL- LONGITUDINAL JOINT

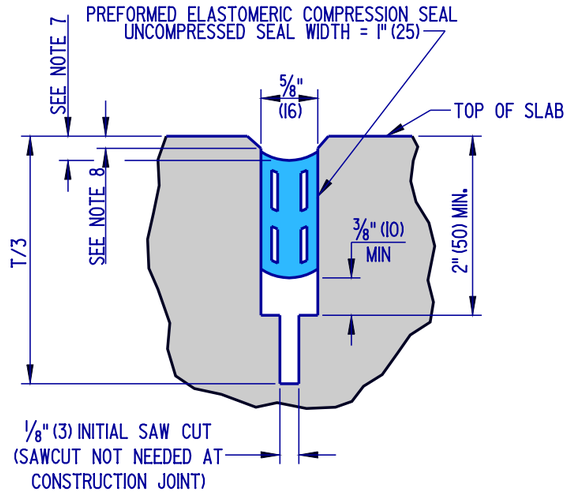

SEALANT DETAIL- TRANSVERSE JOINT

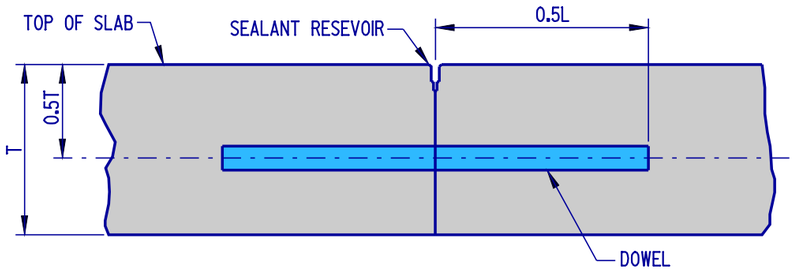

TRANSVERSE CONSTRUCTION JOINT DETAIL

* - 0.3T (10" (250) P.C.C. PAVEMENT)
0.4T (12" (300) P.C.C. PAVEMENT)

NOTES:

1). AS DIMENSIONED, THE WIDTH OF THE TRANSVERSE SEALANT RESERVOIR IS APPLICABLE WHEN THE TEMPERATURE OF THE PAVEMENT SURFACE IS BETWEEN 60°F (16°C) AND 80°F (27°C). WHEN THE TEMPERATURE IS BELOW 60°F (16°C), THE SEALANT RESERVOIR SHALL BE CUT 1/16" (2) WIDER. WHEN THE TEMPERATURE IS ABOVE 80°F (27°C), THE SEALANT RESERVOIR SHALL BE CUT 1/16" (2) NARROWER.
2). "T" REFERS TO THE ACTUAL CONSTRUCTED SLAB THICKNESS.
3). TOLERANCE ON ALL JOINT SEALANT DETAIL DIMENSIONS SHOWN WITHOUT RANGES SHALL BE PLUS 1/16" (2), MINUS 0" (0).
4). THE TOP EDGES OF THE CONTACT SURFACES OF THE SEALANT MATERIAL ON BOTH SIDES OF THE JOINT RESERVOIR SHALL BE AT THE SAME ELEVATION.
5). TRANSVERSE JOINT MATERIAL SHALL BE PLACED BEFORE LONGITUDINAL JOINT MATERIAL; THE TRANSVERSE JOINT MATERIAL SHALL BE CONTINUOUS FOR THE FULL WIDTH OF ALL ADJACENT P.C.C. PAVEMENT SLABS.
6). LONGITUDINAL JOINT MATERIAL SHALL BE PLACED WITHOUT GAPS WHENEVER INTERRUPTED BY THE TRANSVERSE JOINT MATERIAL.
7). TRANSVERSE JOINT SEAL TO BE RECESSED 3/16" (5) TO 5/16" (8) BELOW THE TOP OF THE SLAB.
8). A 45° CHAMFER SHALL BE CUT 1/8" (3) TO 1/4" (6) DEEP AT THE TOP OF THE SLAB ALONG BOTH SIDES OF THE TRANSVERSE SEALANT RESERVOIR.
9). THE TOP EDGES OF THE COMPRESSION SEAL SHALL BE IN FULL CONTACT WITH THE SLAB SIDES.

JOINT AND SEALANT DETAILS

DELAWARE DEPARTMENT OF TRANSPORTATION	P.C.C. PAVEMENT		APPROVED Carolann Wicks CHIEF ENGINEER 1/10/05 DATE
	STANDARD NO. P-1 (2004)	SHT. 2 OF 5	RECOMMENDED Dennis M. Office DESIGN ENGINEER 1/3/05 DATE

10/01/2004

SCALE : N.T.S.

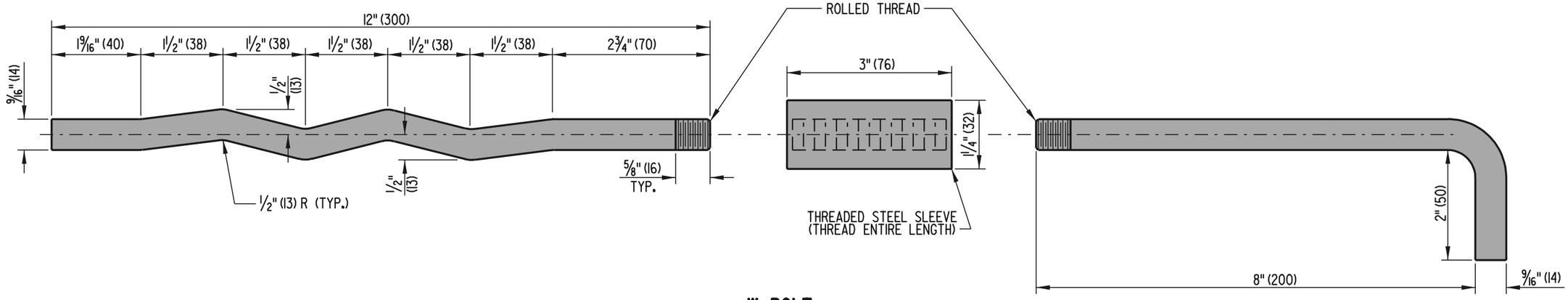

W BOLT

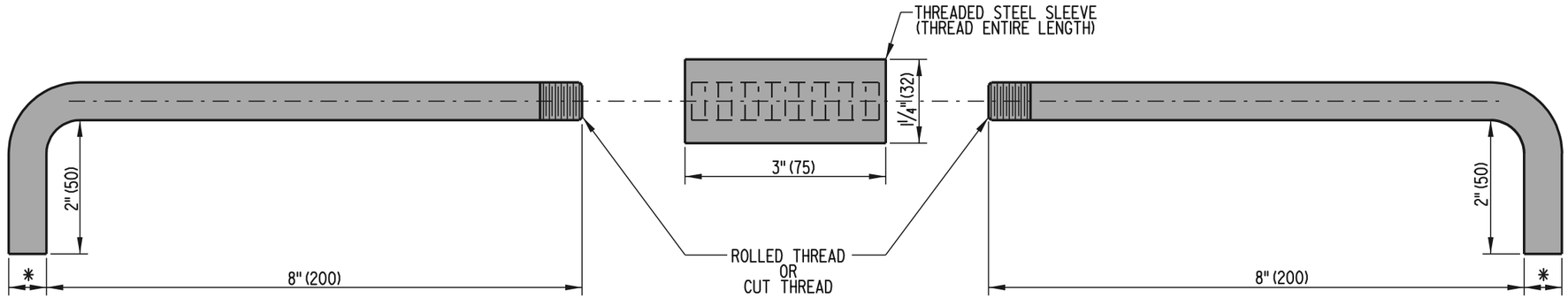

HOOK BOLT

* - 11/16" (17) ROLLED THREADS
3/4" (19) CUT THREADS

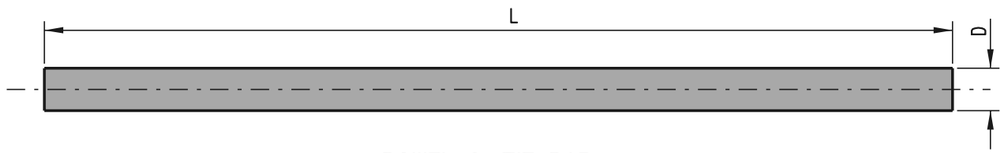

DOWEL & TIE BAR

DOWEL & TIE BAR CHART				
SLAB THICKNESS	DOWEL		TIE BAR	
	D	L	D	L
10" (250)	1 1/4" (32)	18" (450)	5/8" (16)	30" (750)
12" (300)	1 1/2" (38)	20" (500)	5/8" (16)	30" (750)

DELAWARE
DEPARTMENT OF TRANSPORTATION

P.C.C. PAVEMENT

STANDARD NO. P-1 (2001) | SHT. 3 OF 5

APPROVED _____ CHIEF ENGINEER DATE 6/18/01

RECOMMENDED _____ DESIGN ENGINEER DATE 6/15/01

05/22/2001

SCALE : N.T.S.

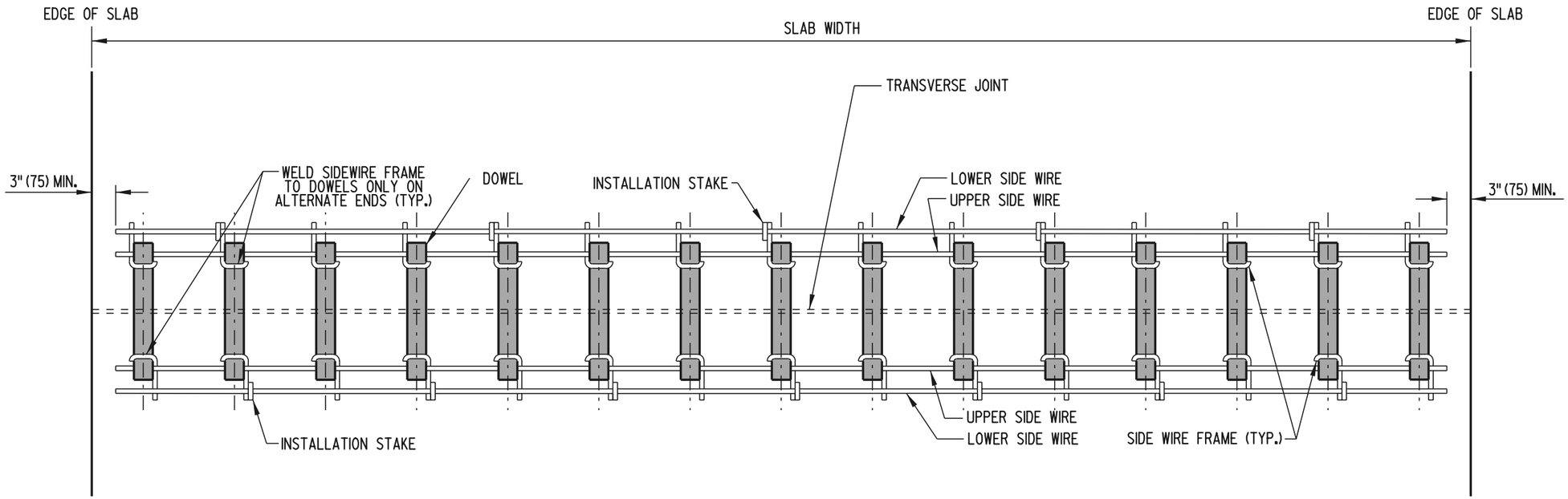

PLAN

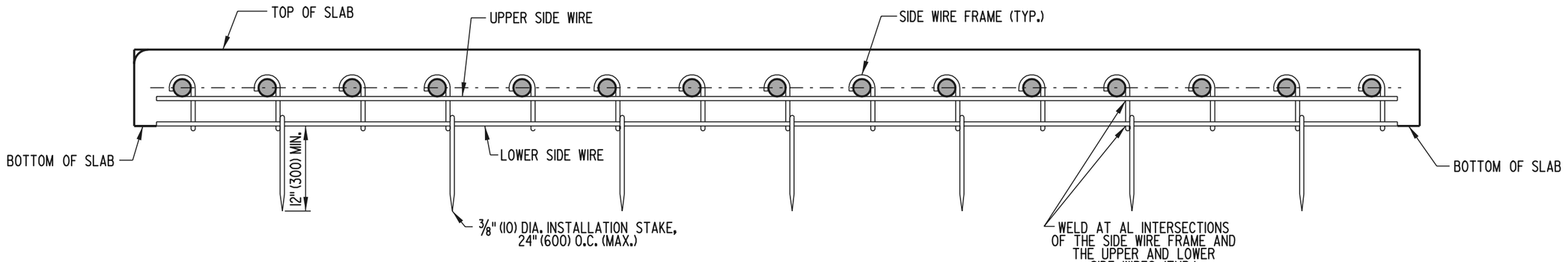

ELEVATION

DOWEL SUPPORT BASKET

DELAWARE DEPARTMENT OF TRANSPORTATION	P.C.C. PAVEMENT		APPROVED Lynne M. Hastings CHIEF ENGINEER DATE 6/18/01
	STANDARD NO. P-1 (2001)	SHT. 4 OF 5	RECOMMENDED [signature] DESIGN ENGINEER DATE 6/15/01

04/18/2001

SCALE : N.T.S.

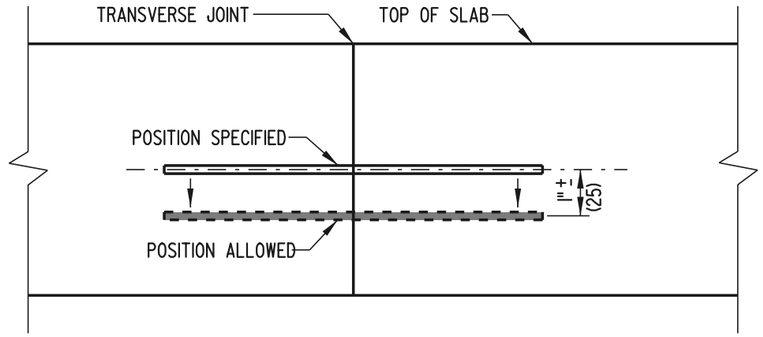

VERTICAL TRANSLATION

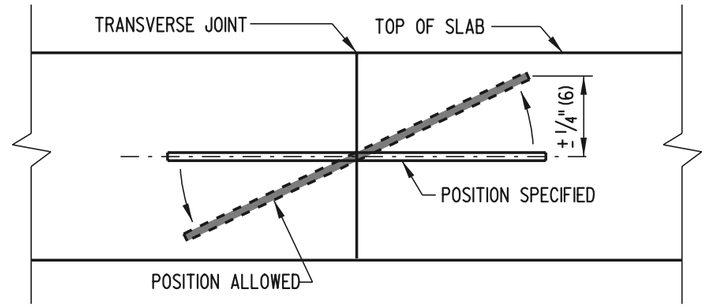

VERTICAL ROTATION

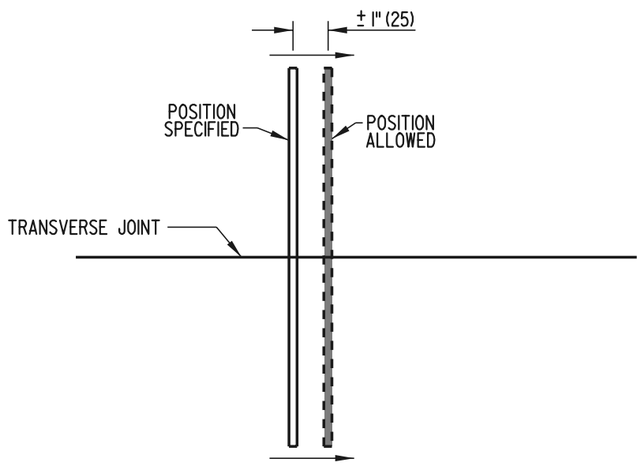

HORIZONTAL TRANSLATION

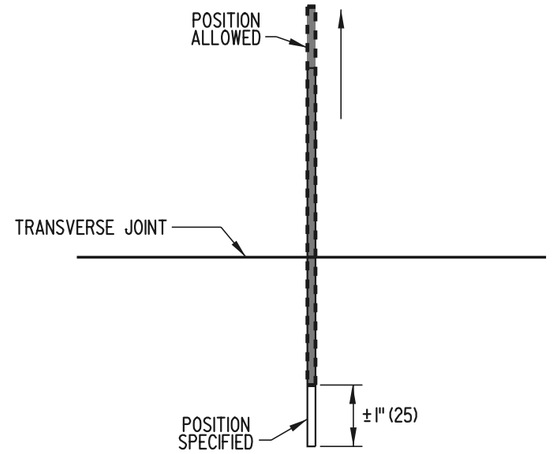

LONGITUDINAL TRANSLATION

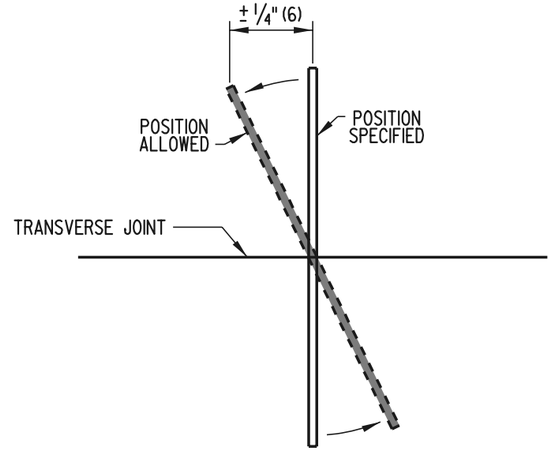

HORIZONTAL ROTATION

DOWEL & TIE BAR PLACEMENT TOLERANCES

DELAWARE DEPARTMENT OF TRANSPORTATION	P.C.C. PAVEMENT		APPROVED [signature] CHIEF ENGINEER 6/18/01 DATE
	STANDARD NO. P-1 (2001)	SHT. 5 OF 5	RECOMMENDED [signature] DESIGN ENGINEER 6/15/01 DATE

04/18/2001

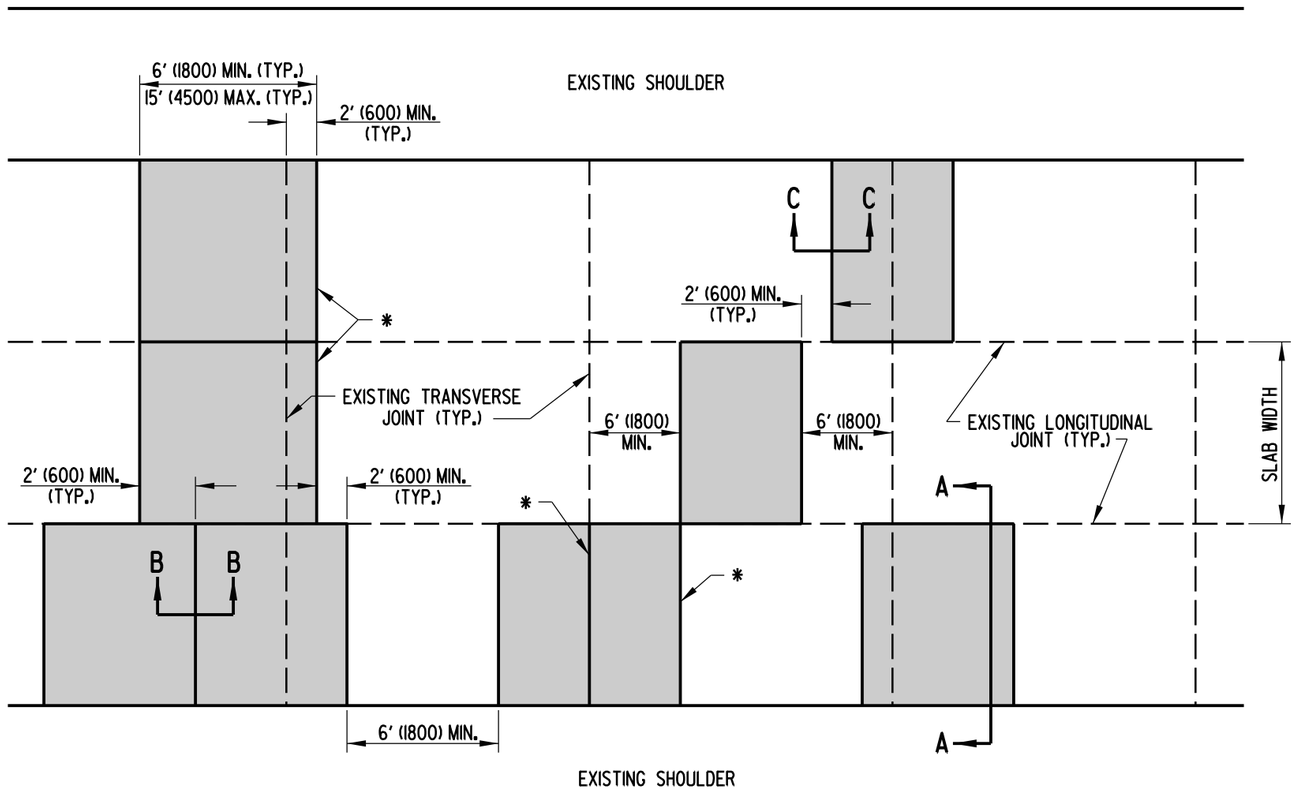

PLAN

* - PROPOSED LOCATIONS FOR TRANSVERSE JOINTS SHALL EXACTLY MATCH THE ALIGNMENT OF THE FINAL (EXISTING OR RELOCATED) TRANSVERSE JOINTS IN ALL IMMEDIATELY ADJACENT LANES.

NOTES:

1). WHEN REPAIRING EXISTING TRANSVERSE JOINTS, THE PATCH SHALL EXTEND A MINIMUM OF 24" (600) THROUGH THE EXISTING JOINT, WHICH WILL RELOCATE THE JOINT.

2). PROPOSED LOCATIONS FOR TRANSVERSE JOINTS, WHEN NOT ALIGNED WITH THE FINAL EXPECTED TRANSVERSE JOINT LOCATIONS IN THE IMMEDIATELY ADJACENT LANES, SHALL BE OFFSET A MINIMUM OF 2' (600) FROM THE AFFORMENTIONED JOINTS.

3). THE LONGITUDINAL JOINT ALIGNMENT SHALL BE STRAIGHT AND CONTINUOUS THROUGH THE REPAIRED AREA.

SCALE : N.T.S.

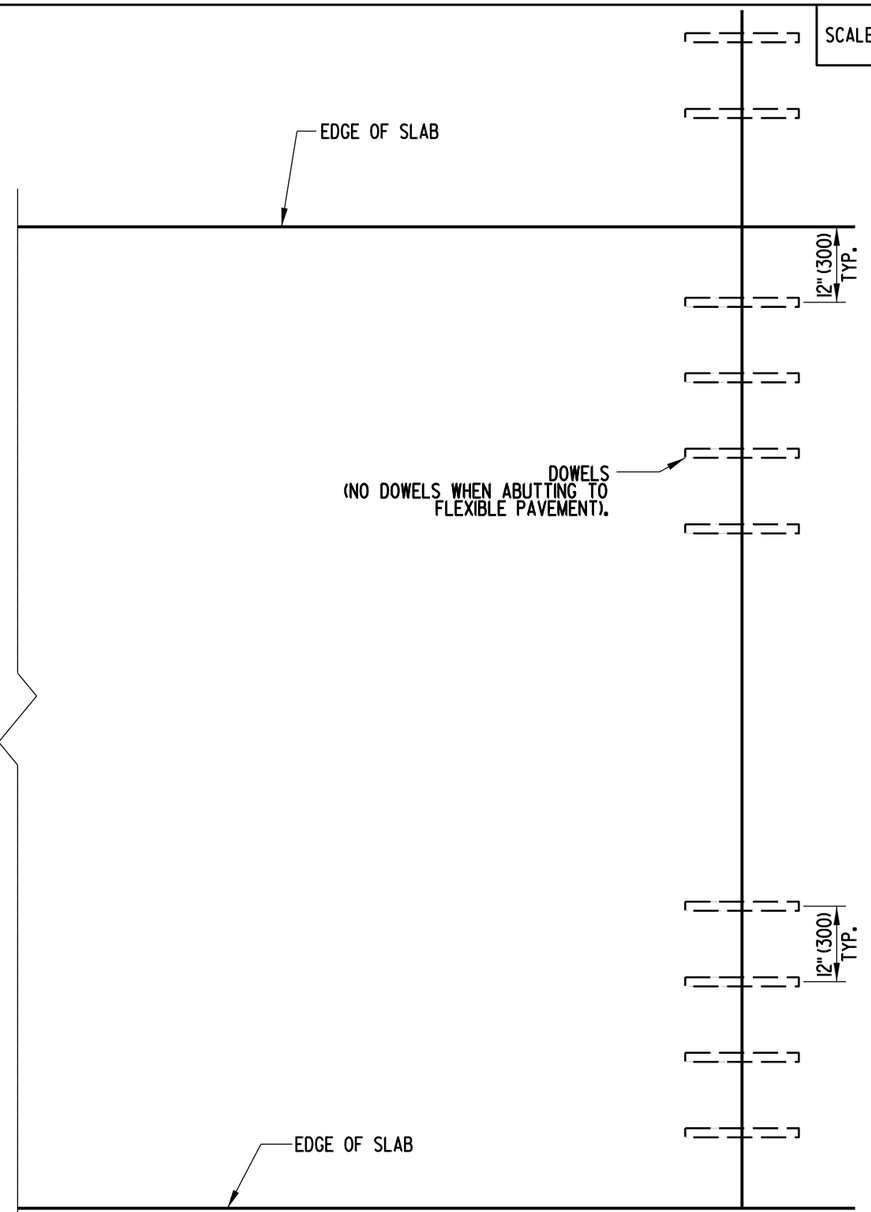

SLAB PLAN (WITH DOWEL AND TIE LOCATIONS)

FULL DEPTH PATCH

DELAWARE DEPARTMENT OF TRANSPORTATION	P.C.C. PAVEMENT PATCHING			APPROVED CHIEF ENGINEER	DATE 11/18/08
	STANDARD NO. P-2 (2008)	SHT. 1	OF 5	RECOMMENDED DESIGN ENGINEER	DATE 11/17/08

11/14/2008

SCALE : N.T.S.

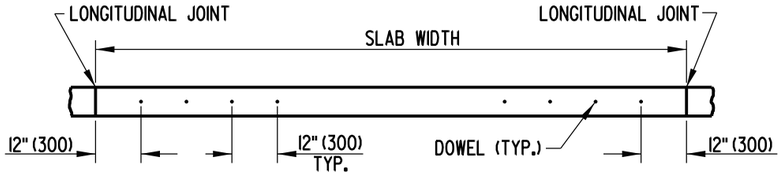

SECTION A-A

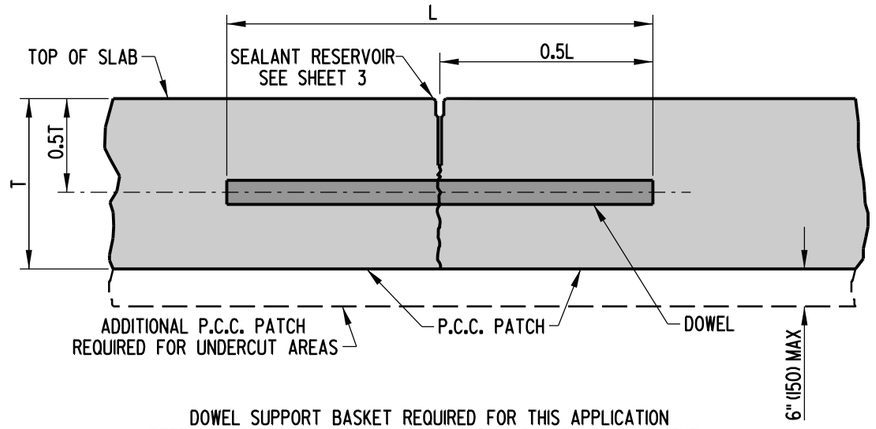

DOWEL SUPPORT BASKET REQUIRED FOR THIS APPLICATION
(REFER TO STANDARD CONSTRUCTION DETAIL FOR P.C.C. PAVEMENT.)

SECTION B-B

TRANSVERSE SAW-CUT USED FOR
JOINTS LOCATED WITHIN THE PATCH

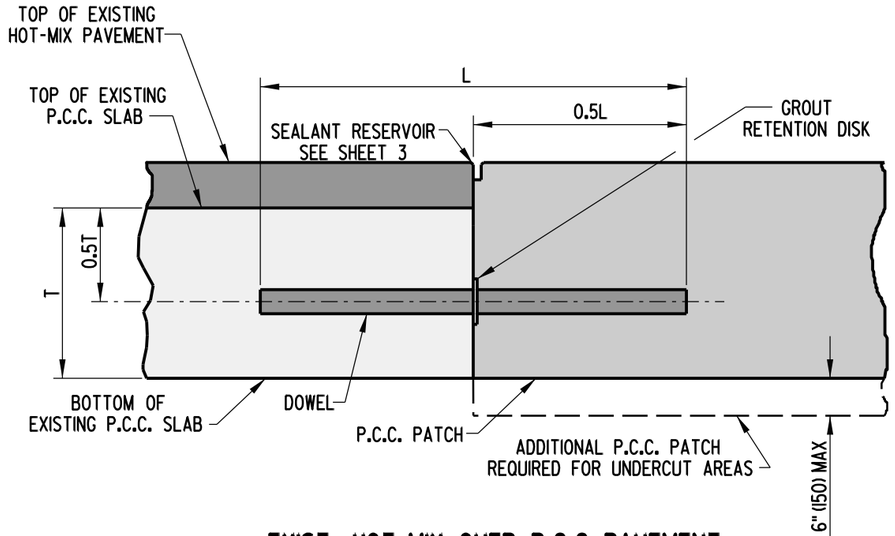

EXIST. HOT-MIX OVER P.C.C. PAVEMENT

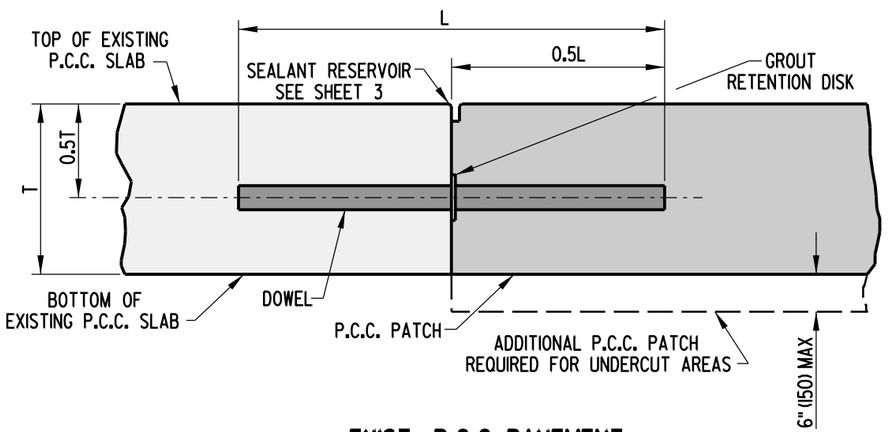

EXIST. P.C.C. PAVEMENT

SECTION C-C

TRANSVERSE CONSTRUCTION JOINT USED ON
JOINTS BETWEEN EXISTING PAVEMENT AND PATCH

FULL DEPTH PATCH

DELAWARE DEPARTMENT OF TRANSPORTATION	P.C.C. PAVEMENT PATCHING		APPROVED CHIEF ENGINEER — DATE 11/18/08
	STANDARD NO. P-2 (2008)	SHT. 2 OF 5	RECOMMENDED DESIGN ENGINEER — DATE 11/17/08

11/14/2008

SCALE : N.T.S.

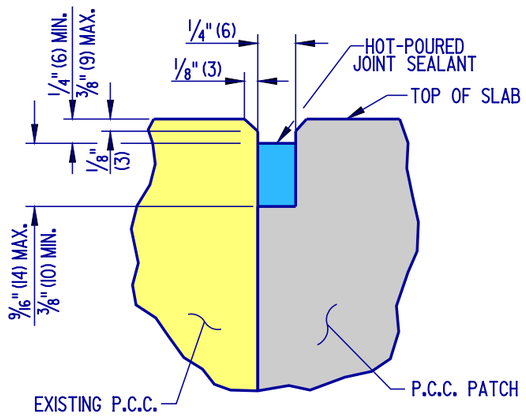

SEALANT DETAIL- LONGITUDINAL JOINT

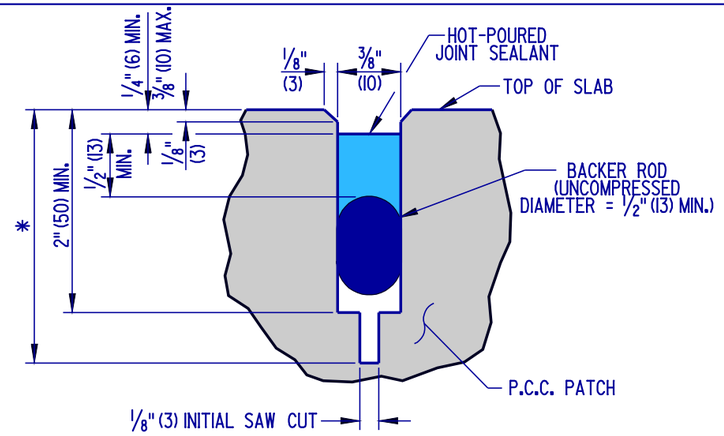

* - 0.3T (T ≤ 10" (250) P.C.C. PAVEMENT)
0.4T (T > 10" (250) P.C.C. PAVEMENT)

SEALANT DETAIL- TRANSVERSE SAW-CUT JOINT

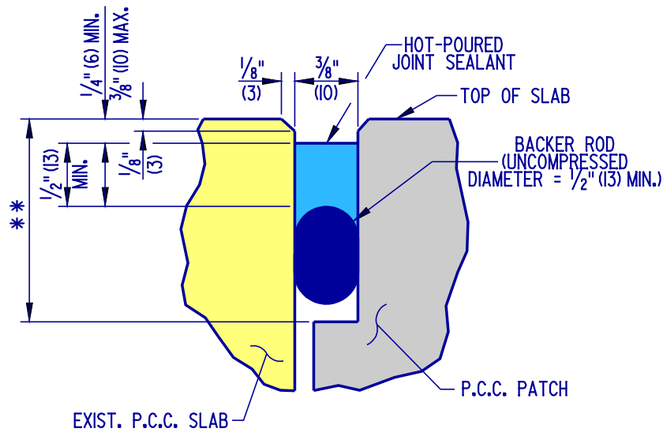

** - 2" (50) MIN. WITH BACKER ROD
5/8" (16) MIN. WITH BOND BREAKER TAPE

SEALANT DETAIL- TRANSVERSE CONSTRUCTION JOINT

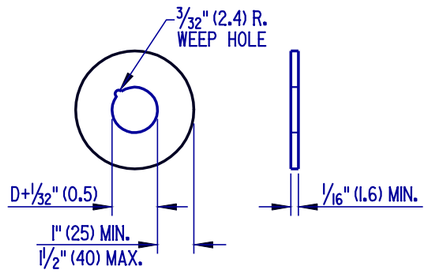

D - DOWEL DIAMETER (INCLUDING PROTECTING COATINGS, IF ANY.)

GROUT RETENTION DISK

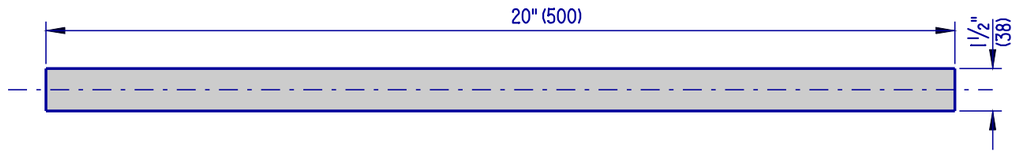

DOWEL BAR

NOTES:
1). AS DIMENSIONED, THE WIDTH OF THE TRANSVERSE SEALANT RESERVOIR IS APPLICABLE WHEN THE TEMPERATURE OF THE PAVEMENT SURFACE IS BETWEEN 60°F (16°C) AND 80°F (27°C). WHEN THE TEMPERATURE IS BELOW 60°F (16°C), THE SEALANT RESERVOIR SHALL BE CUT 1/16" (2) WIDER. WHEN THE TEMPERATURE IS ABOVE 80°F (27°C), THE SEALANT RESERVOIR SHALL BE CUT 1/16" (2) NARROWER.
2). "T" REFERS TO THE EXISTING "AS-BUILT" SLAB THICKNESS.
3). TOLERANCE ON ALL JOINT SEALANT DETAIL DIMENSIONS SHOWN WITHOUT RANGES SHALL BE PLUSS1/16" (2), MINUS 0" (0).
4). THE TOP EDGES OF THE CONTACT SURFACES OF THE SEALANT MATERIAL ON BOTH SIDES OF THE JOINT RESERVOIR SHALL BE AT THE SAME ELEVATION.

FULL DEPTH PATCH

DELAWARE DEPARTMENT OF TRANSPORTATION	P.C.C. PAVEMENT PATCHING		APPROVED Carolann Wicks CHIEF ENGINEER 1/10/05 DATE
	STANDARD NO. P-2 (2004)	SHT. 3 OF 5	RECOMMENDED Dennis M. O'Toole DESIGN ENGINEER 1/3/05 DATE

10/01/2004

SCALE : N.T.S.

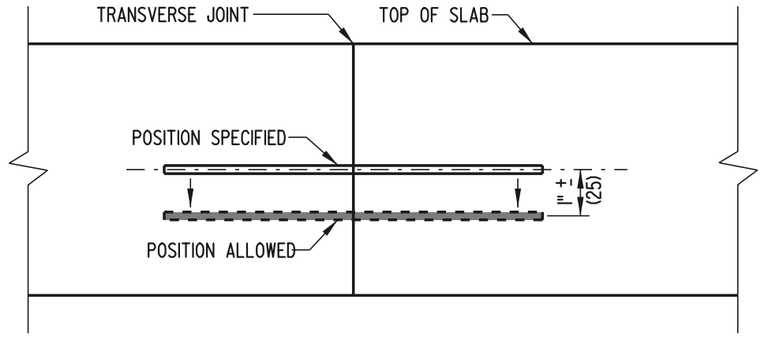

VERTICAL TRANSLATION

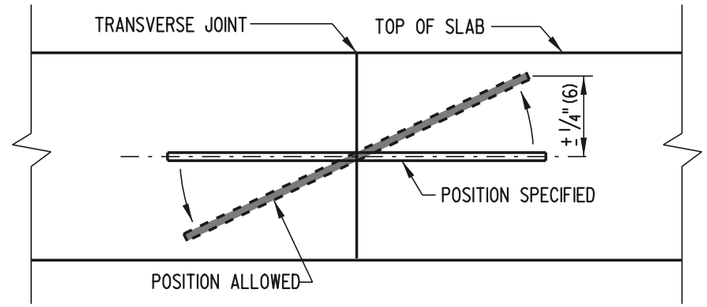

VERTICAL ROTATION

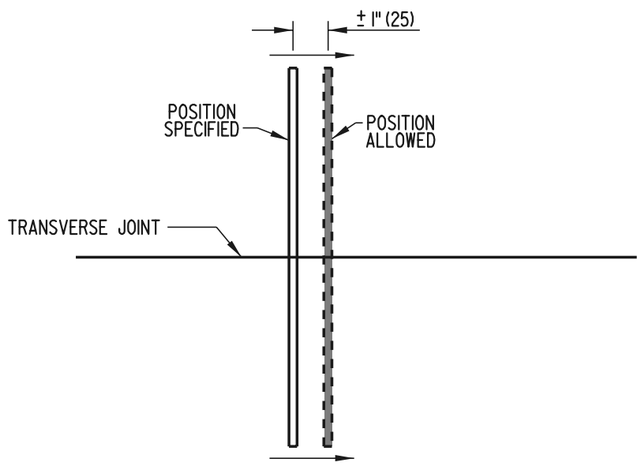

HORIZONTAL TRANSLATION

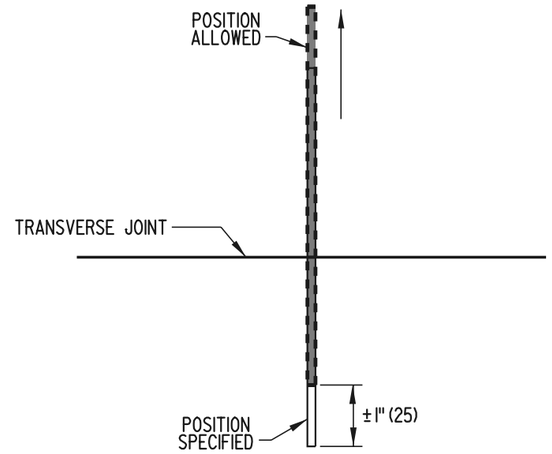

LONGITUDINAL TRANSLATION

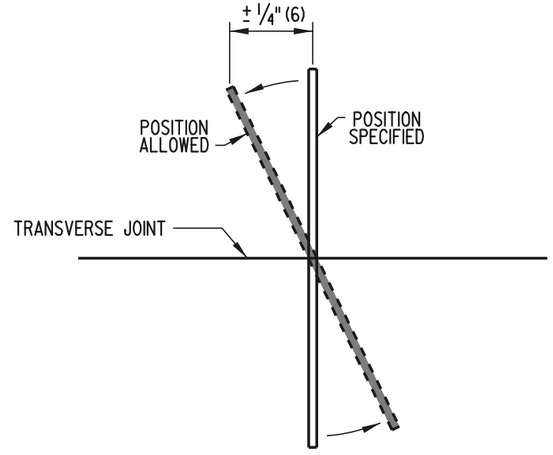

HORIZONTAL ROTATION

DOWEL & TIE BAR PLACEMENT TOLERANCES

FULL DEPTH PATCH

DELAWARE DEPARTMENT OF TRANSPORTATION	P.C.C. PAVEMENT PATCHING		APPROVED _____ CHIEF ENGINEER DATE 6/18/01
	STANDARD NO. P-2 (2001)	SHT. 4 OF 5	RECOMMENDED _____ DESIGN ENGINEER DATE 6/15/01

04/18/2001

SCALE : N.T.S.

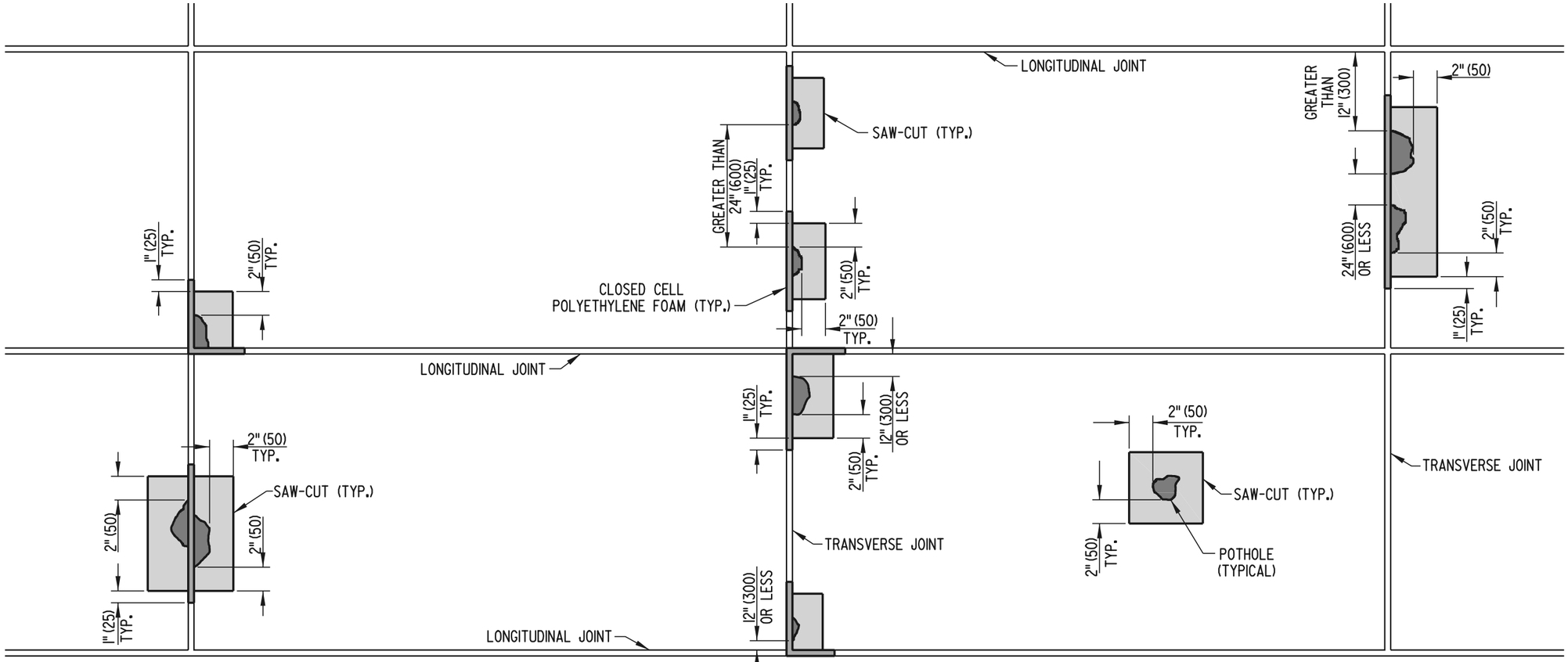

PLAN

NOTE: CLOSED CELL POLYETHYLENE FOAM SHALL BE THE SAME WIDTH AS THE JOINT AND 5" (125) IN DEPTH. AFTER THE CONCRETE IN THE REPAIR AREA HAS ACHIEVED THE SPECIFIED STRENGTH, THE FOAM SHALL BE REMOVED AND REPLACED WITH BACKER ROD AND HOT-POUR SEALANT MEETING ALL APPLICABLE STANDARD DETAILS AND SPECIFICATIONS.

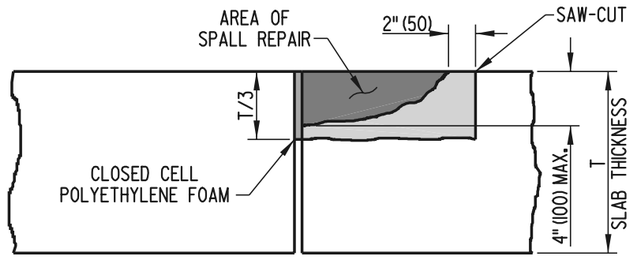

SECTION WITH SPALL ADJACENT TO JOINT

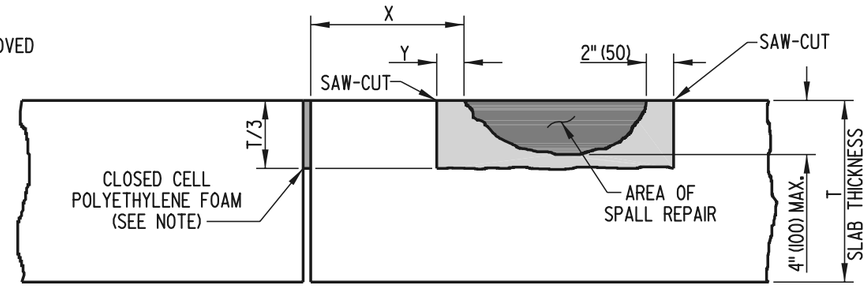

SECTION WITH SPALL NOT ADJACENT TO JOINT

NOTE: WHEN X > 12" (300), THEN Y=1" (25) AND POLYETHYLENE FOAM IS NOT USED.
WHEN X ≤ 12" (300), THEN Y=X AND POLYETHYLENE FOAM IS USED.

PARTIAL DEPTH PATCH

DELAWARE DEPARTMENT OF TRANSPORTATION	P.C.C. PAVEMENT PATCHING		APPROVED [signature] CHIEF ENGINEER 6/18/01 DATE
	STANDARD NO. P-2 (2001)	SHT. 5 OF 5	RECOMMENDED [signature] DESIGN ENGINEER 6/15/01 DATE

05/22/2001

SCALE : N.T.S.

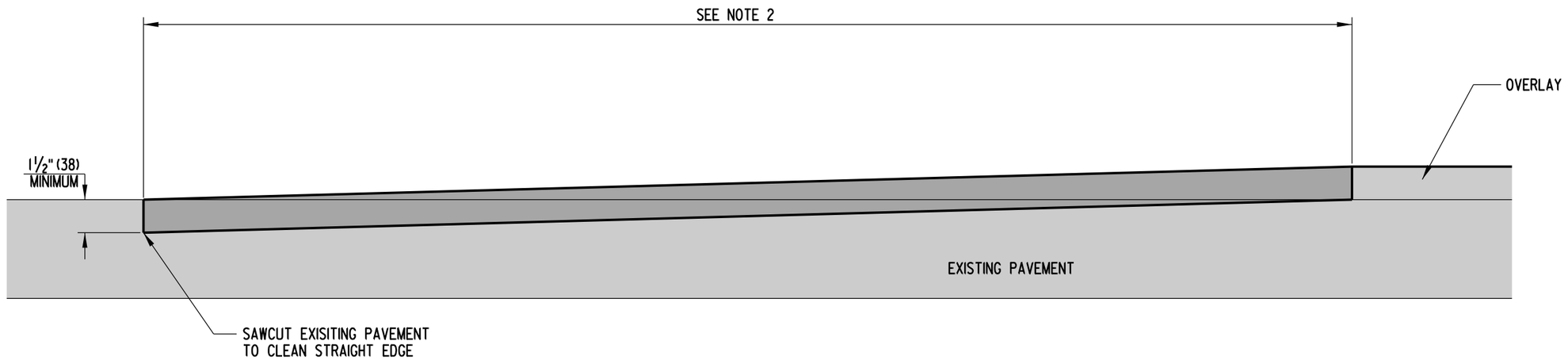

NOTES:

1). THE PROFILE OF THE OVERLAY PAVING SHALL BE ADJUSTED TO ASSURE A SMOOTH TRANSITION THROUGH THE BUTT JOINT. THE REMOVAL AND CLEANUP OF THE HOT MIX RESIDUE WEDGE LEFT FROM THE MILLING OPERATIONS ALONG CURB LINES, ADJACENT TO SPEED HUMPS, ACROSS INTERSECTING STREETS, AND AT THE BEGINNING AND ENDING POINTS OF THE BUTT JOINT, SHALL BE INCIDENTAL TO THE BUTT JOINT ITEM.

2). THE LENGTH OF THE BUTT JOINT SHALL BE EQUAL TO 30' (90m) FOR EVERY 1" (25) OF OVERLAY DEPTH.

DELAWARE **DEPARTMENT OF TRANSPORTATION**	**BUTT JOINTS**	**APPROVED** SIGNATURE ON FILE (CHIEF ENGINEER) 01/19/2010 (DATE)
	STANDARD NO. P-3 (2009) — **SHT. 1 OF 1**	**RECOMMENDED** SIGNATURE ON FILE (DESIGN ENGINEER) 01/14/2010 (DATE)

01/08/2010

SCALE : N.T.S.

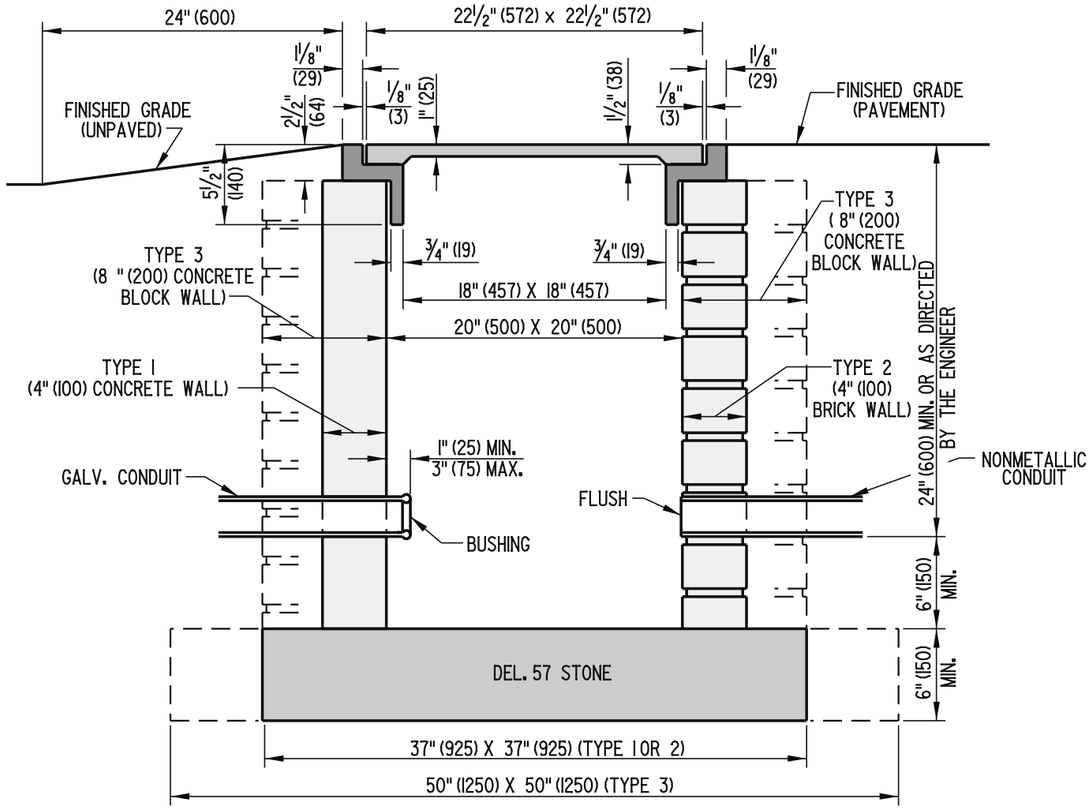

SECTION A-A

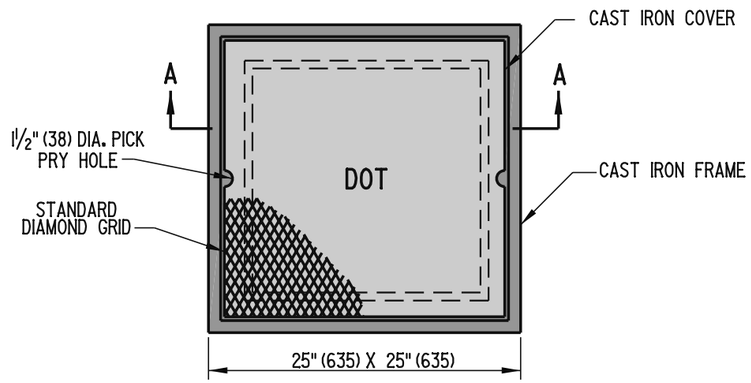

PLAN VIEW

NOTES:

1). TYPE 1 CONDUIT JUNCTION WELL SHALL BE PRECAST CONCRETE. AT LEAST ONE HOLE IN PRECAST WELLS WILL BE OF A 5" (125) DIAMETER COMPLETELY THROUGH THE WALL. UNUSED HOLES SHALL BE PLUGGED.

2). TYPE 2 AND TYPE 3 CONDUIT JUNCTION WELLS SHALL BE BRICK AND WILL CONFORM TO STANDARD SPECIFICATIONS FOR BRICK MASONRY. JOINTS SHALL BE CONCAVE TYPE. TYPE 2 WALLS WILL BE A NOMINAL 4" (100) THICK. TYPE 3 WALL WILL BE A NOMINAL 8" (200) THICK.

3). TYPE 2 AND TYPE 3 CONDUIT JUNCTION WELLS SHALL NOT BE PLACED UNDER ANY TYPE OF PAVEMENT.

4). ALL CONDUIT JUNCTION WELLS CONSTRUCTED WITHIN PAVEMENT, SIDEWALKS, ETC. WILL BE CONSTRUCTED FLUSH WITH THE SURFACE OF THE SAME. INSTALLATION IN UNPAVED AREAS WILL BE CONSTRUCTED ABOVE GRADE AND GRADED TO DRAIN AWAY FROM CONDUIT JUNCTION WELL.

DELAWARE DEPARTMENT OF TRANSPORTATION	CONDUIT JUNCTION WELL, TYPES 1, 2, AND 3		APPROVED Carolann Wicks CHIEF ENGINEER 12/5/05 DATE
	STANDARD NO. T-1 (2005)	SHT. 1 OF 1	RECOMMENDED [signature] DESIGN ENGINEER 11/29/05 DATE

09/08/2005

SCALE : N.T.S.

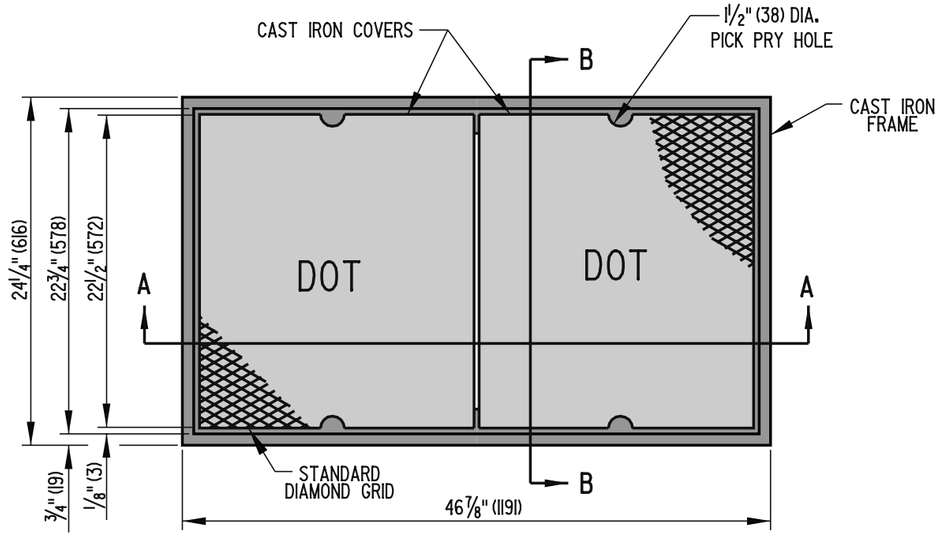

PLAN VIEW

NOTES: 1). TYPE 4 CONDUIT JUNCTION WELL SHALL BE PRECAST CONCRETE. AT LEAST ONE HOLE IN PRECAST WELLS WILL BE OF A 5" (125) DIAMETER COMPLETELY THROUGH THE WALL. UNUSED HOLES SHALL BE PLUGGED.

2). ALL CONDUIT JUNCTION WELLS CONSTRUCTED WITHIN PAVEMENT, SIDEWALKS, ETC. WILL BE CONSTRUCTED FLUSH WITH THE SURFACE OF THE SAME. INSTALLATION IN UNPAVED AREAS WILL BE CONSTRUCTED ABOVE GRADE AND GRADED TO DRAIN AWAY FROM CONDUIT JUNCTION WELL.

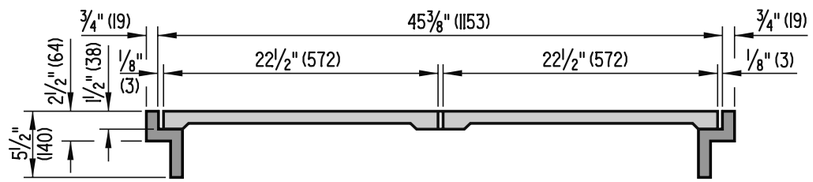

SECTION A-A

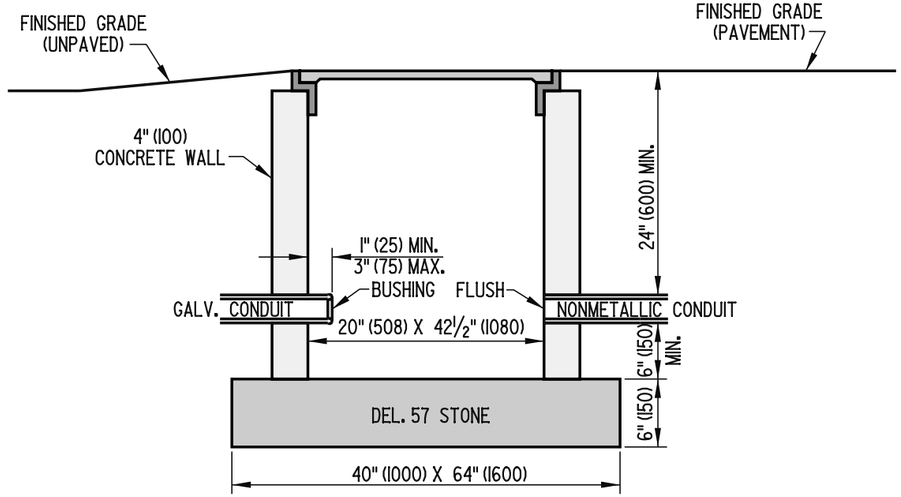

SECTION B-B

DELAWARE DEPARTMENT OF TRANSPORTATION	CONDUIT JUNCTION WELL, TYPE 4		APPROVED Carolann Wicks (CHIEF ENGINEER) 12/5/05 (DATE)
	STANDARD NO. T-2 (2005)	SHT. 1 OF 1	RECOMMENDED [signature] (DESIGN ENGINEER) 11/29/05 (DATE)

09/08/2005

SCALE : N.T.S.

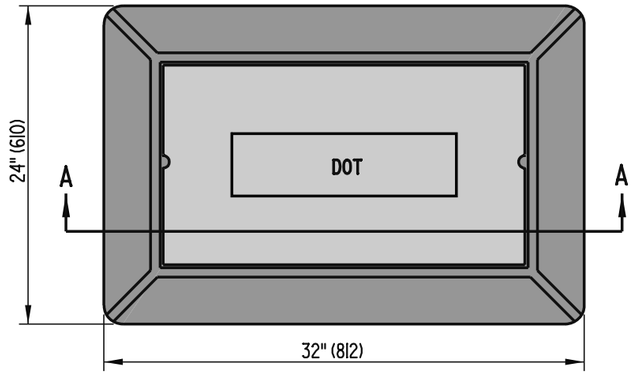

PLAN VIEW

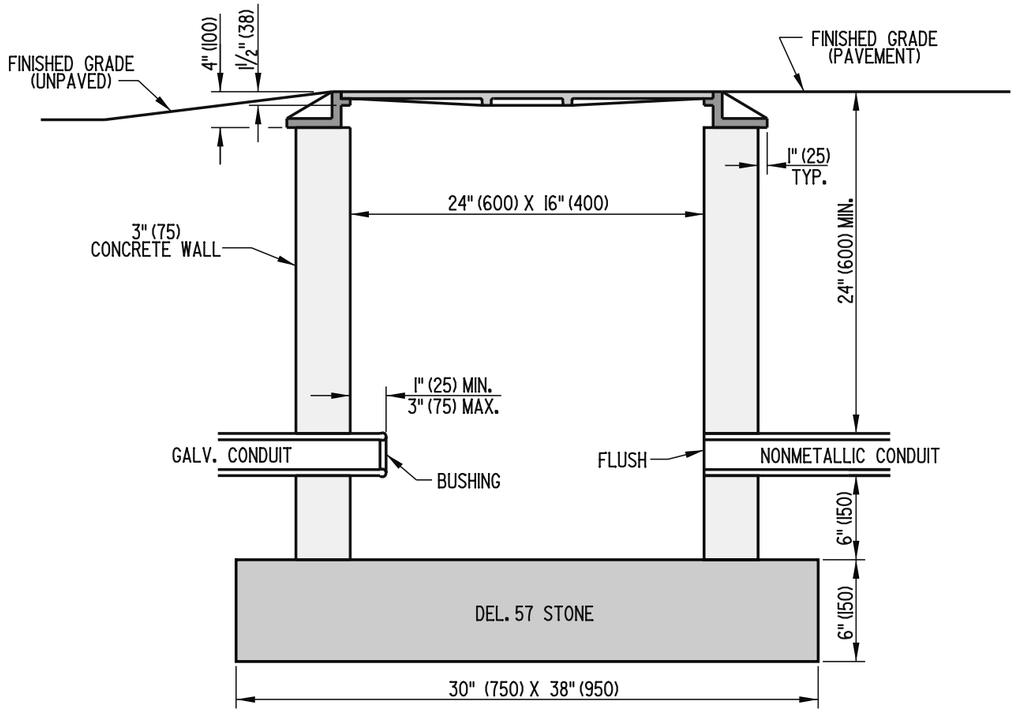

SECTION A-A

NOTES: 1). TYPE 5 CONDUIT JUNCTION WELL SHALL BE PRECAST CONCRETE. AT LEAST ONE HOLE IN PRECAST WELLS WILL BE OF A 5" (125) DIAMETER COMPLETELY THROUGH THE WALL. UNUSED HOLES SHALL BE PLUGGED.

2). ALL CONDUIT JUNCTION WELLS CONSTRUCTED WITHIN PAVEMENT, SIDEWALKS, ETC. WILL BE CONSTRUCTED FLUSH WITH THE SURFACE OF THE SAME. INSTALLATION IN UNPAVED AREAS WILL BE CONSTRUCTED ABOVE GRADE AND GRADED TO DRAIN AWAY FROM CONDUIT JUNCTION WELL.

DELAWARE DEPARTMENT OF TRANSPORTATION	CONDUIT JUNCTION WELL, TYPE 5		APPROVED Carolann Wicks CHIEF ENGINEER 12/5/05 DATE
	STANDARD NO. T-3 (2005)	SHT. 1 OF 1	RECOMMENDED [signature] DESIGN ENGINEER 11/29/05 DATE

09/08/2005

SCALE : N.T.S.

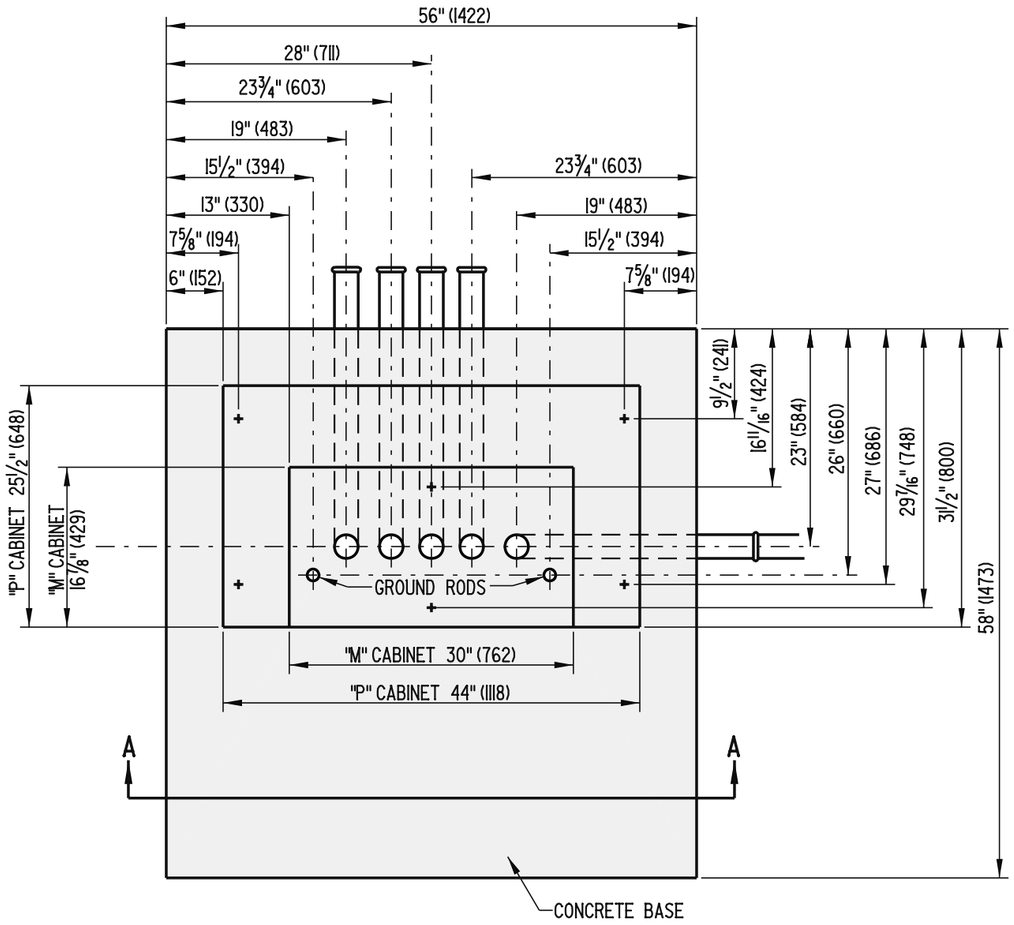

PLAN VIEW

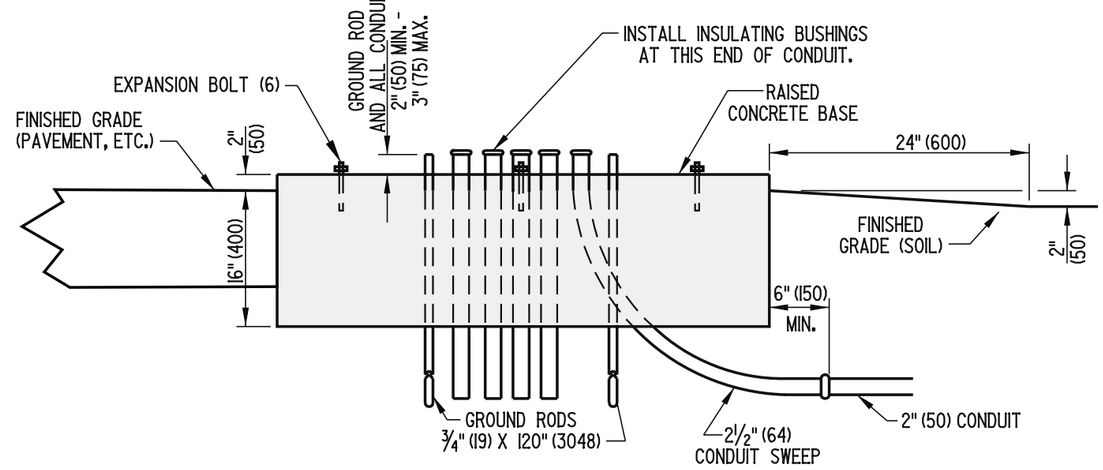

SECTION A-A

CONCRETE CABINET BASE

DELAWARE DEPARTMENT OF TRANSPORTATION	CABINET BASES (TYPES 'M' & 'P')			APPROVED Carolann Wicks CHIEF ENGINEER 12/5/05 DATE
	STANDARD NO. T-4 (2005)	SHT. 1	OF 1	RECOMMENDED James M. O'Neill DESIGN ENGINEER 11/29/05 DATE

09/09/2005

SCALE : N.T.S.

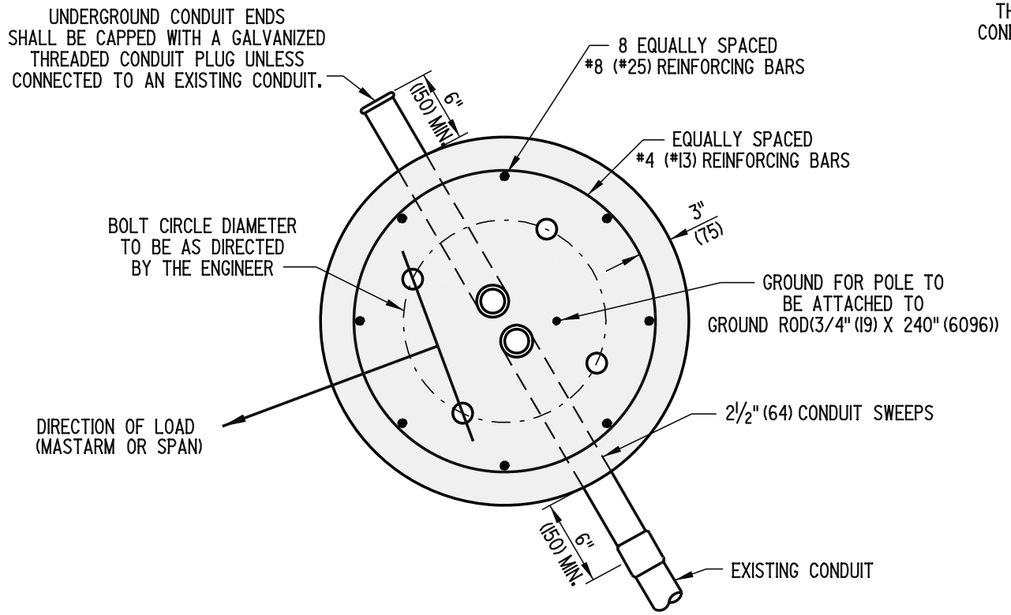

ROUND BASE

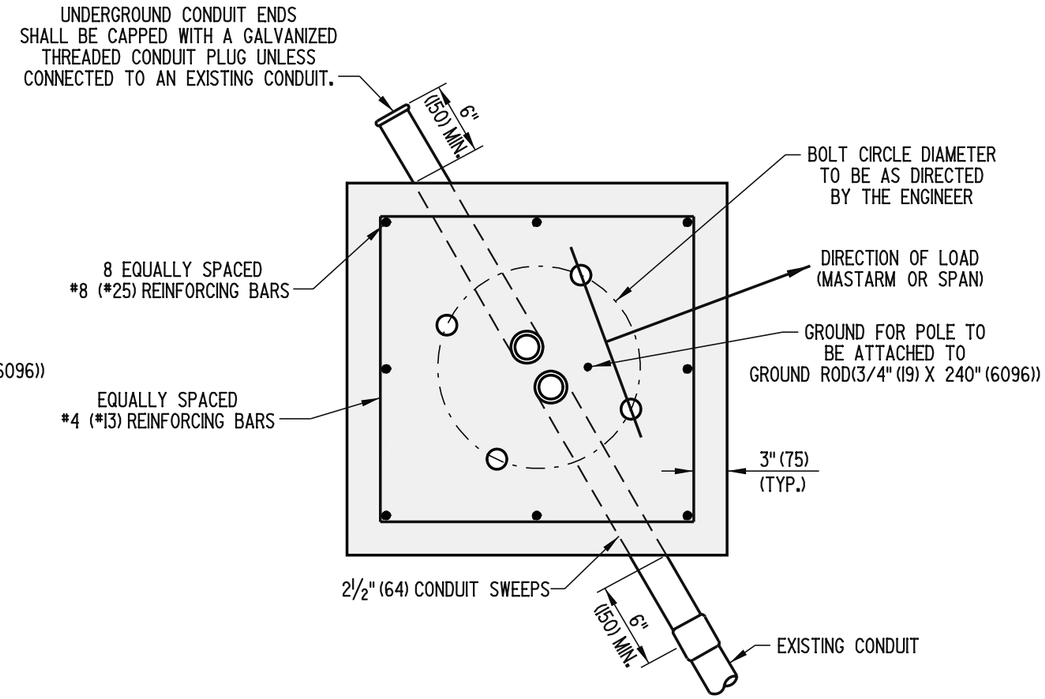

SQUARE BASE

NOTE: BASE DEPENDENT ON POLE AND EQUIPMENT TO BE ATTACHED.

DELAWARE DEPARTMENT OF TRANSPORTATION	POLE BASES		APPROVED Carolann Wicks CHIEF ENGINEER 12/5/05 DATE
	STANDARD NO. T-5 (2005)	SHT. 1 OF 3	RECOMMENDED James M. O'Neill DESIGN ENGINEER 11/29/05 DATE

09/08/2005

SCALE : N.T.S.

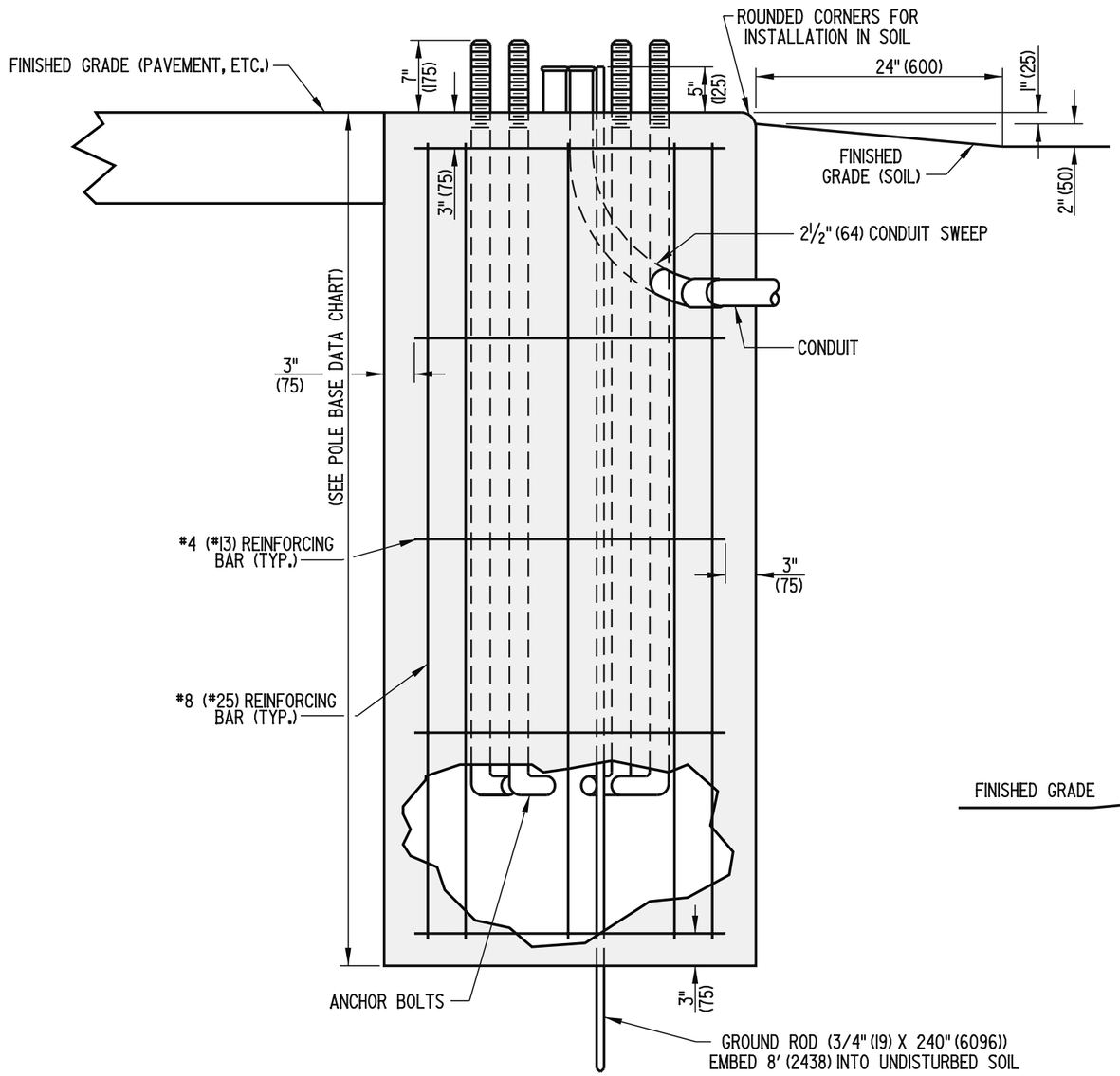

TYPICAL SECTION (BASES 1,2,2A,2B,3,3A,3B, AND 7)

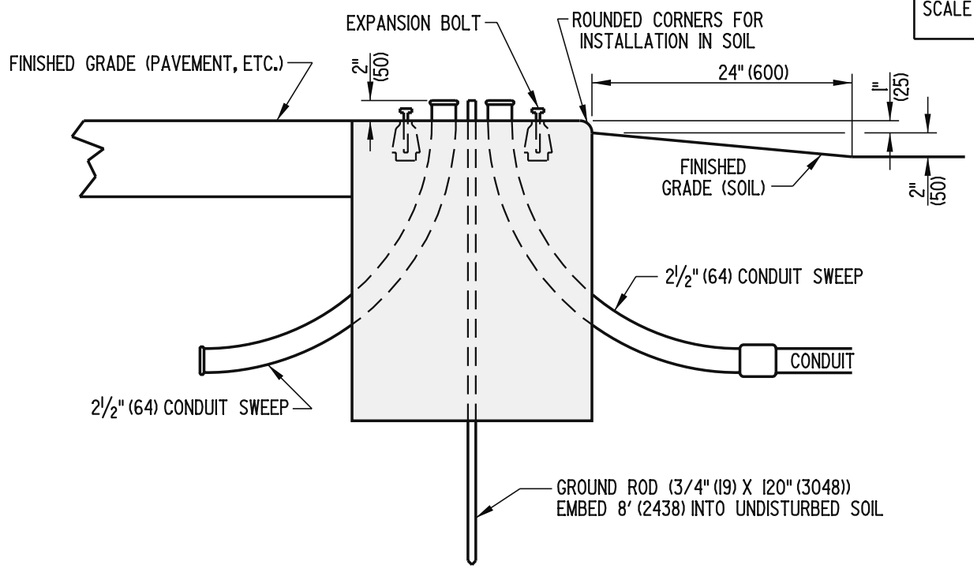

TYPICAL SECTION (BASE 4)

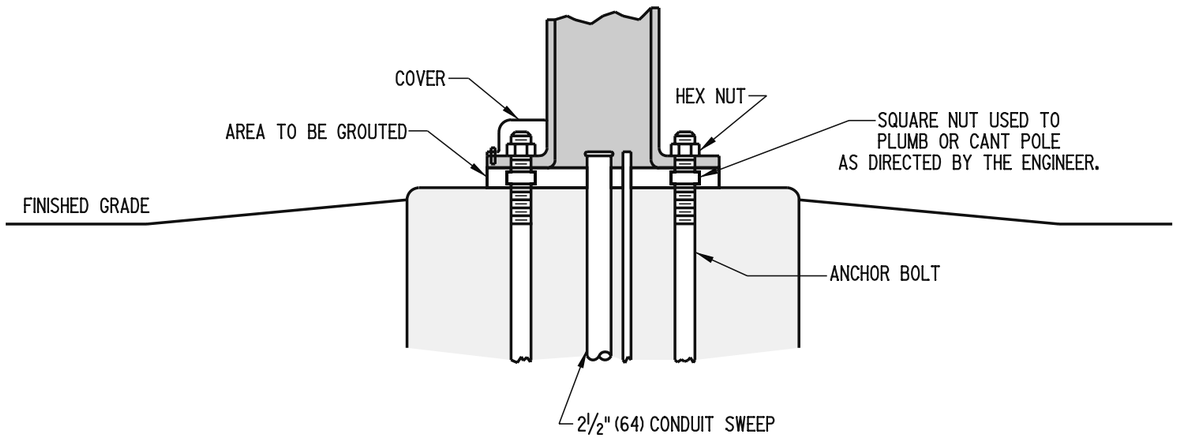

TYPICAL INSTALLATION (BASES 1,2,2A,2B,3,3A,3B,4, AND 7)

NOTES:
1.) PLACE 2 EACH 6" (150) LONG x ½" (13) DIA. P.V.C., SCHEDULE 40 (TYP) VENTS IN THE GROUT AS DIRECTED IN THE FIELD BY ENGINEER.
2.) SEE POLE BASE DATA CHART FOR POLE BASE DIMENSIONS.

DELAWARE DEPARTMENT OF TRANSPORTATION	POLE BASES		APPROVED Carolann Wicks CHIEF ENGINEER 12/5/05 DATE
	STANDARD NO. T-5 (2005)	SHT. 2 OF 3	RECOMMENDED [signature] DESIGN ENGINEER 11/29/05 DATE

09/08/2005

SCALE : N.T.S.

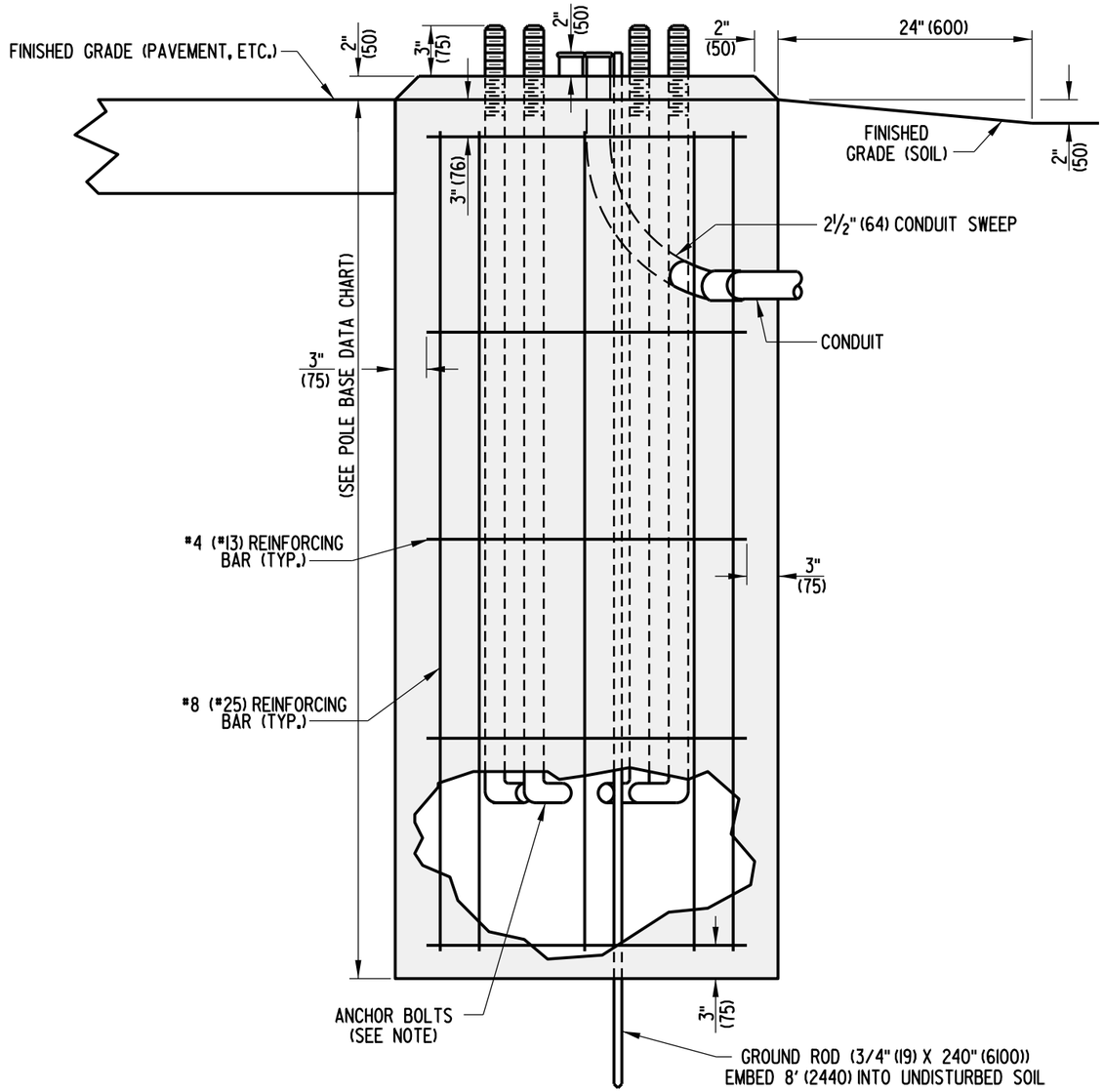

TYPICAL SECTION (BASES 5 AND 6)

NOTE:
SEE SPECIFICATIONS AND DETAILS FROM CURRENT PURCHASING CONTRACT FOR ANCHOR BOLT DIMENSIONS.

POLE BASE DATA CHART

POLE BASE TYPE *	DIAMETER	DEPTH *	*4 (*13) HORIZONTAL REINFORCING BARS	*8 (*25) VERTICAL REINFORCING BARS
1	36" (915)	7' (2150)	5	8
2	36" (915)	10' (3050)	6	8
2A	48" (1220)	8' (2450)	5	8
2B	60" (1525)	7' (2150)	5	8
3	48" (1220)	10' (3050)	6	8
3A	60" (1525)	9' (2750)	6	8
3B	72" (1830)	7' (2150)	5	8
4	24" (610)	2'-4" (725)	NONE	NONE
5	36" (915)	4' (1225)	NONE	NONE
6	24" (610)	6' (1850)	4	8
7	48" (1220)	13'-4" (4000)	7	8

* - ADDITIONAL DEPTH FOR POLE BASE EXTENSION, IF REQUIRED, TO BE DETERMINED BY TRAFFIC ENGINEERING AND MANAGEMENT (TEAM) FIELD REPRESENTATIVE.

DELAWARE
DEPARTMENT OF TRANSPORTATION

POLE BASES

STANDARD NO. T-5 (2008) | SHT. 3 OF 3

APPROVED _____ CHIEF ENGINEER DATE 11/18/08

RECOMMENDED _____ DESIGN ENGINEER DATE 11/17/08

07/30/2008

SCALE : N.T.S.

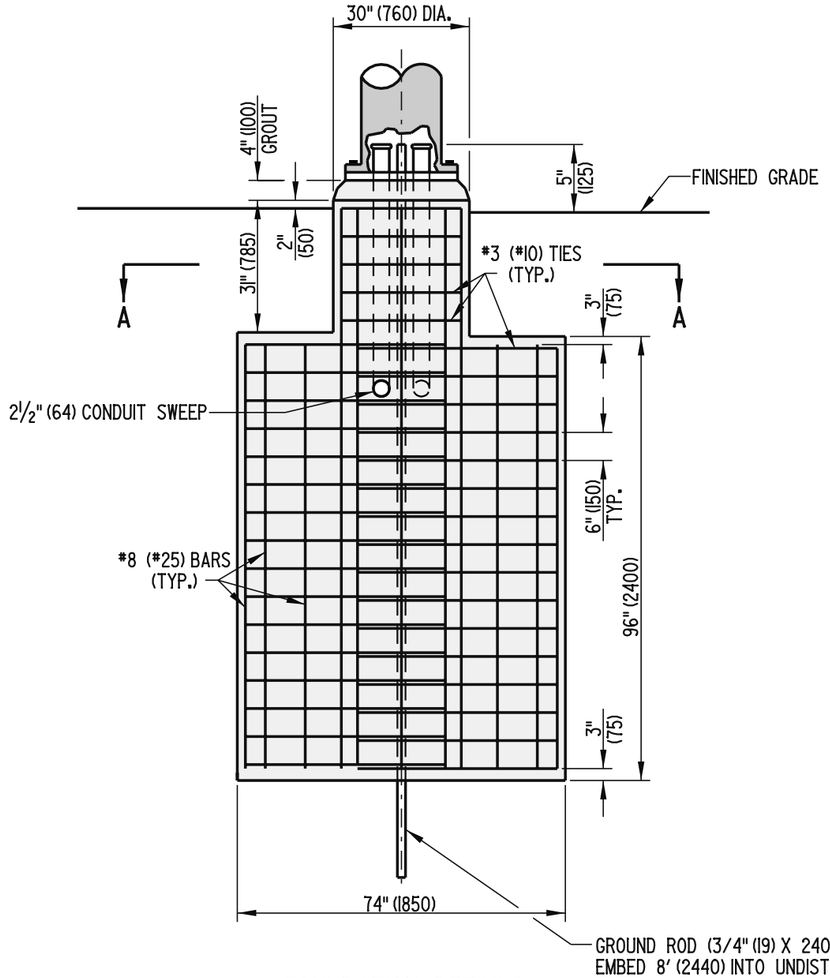

FOUNDATION DETAILS

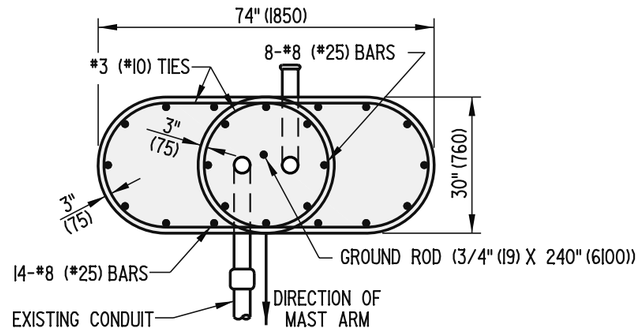

SECTION A-A

NOTES:

1. UNDERGROUND CONDUIT ENDS SHALL BE CAPPED WITH A GALVANIZED THREADED CONDUIT PLUG UNLESS CONNECTED TO AN EXISTING CONDUIT.

2. PLACE 2 EACH 6" (150) x ½" (13) P.V.C., SCHEDULE 40 (TYP) VENTS IN THE GROUT AS DIRECTED IN THE FIELD BY THE ENGINEER.

DELAWARE DEPARTMENT OF TRANSPORTATION	SPECIAL POLE BASE		APPROVED Carolann Wicks CHIEF ENGINEER 12/5/05 DATE
	STANDARD NO. T-6 (2005)	SHT. 1 OF 1	RECOMMENDED DESIGN ENGINEER 11/29/05 DATE

09/09/2005

SCALE : N.T.S.

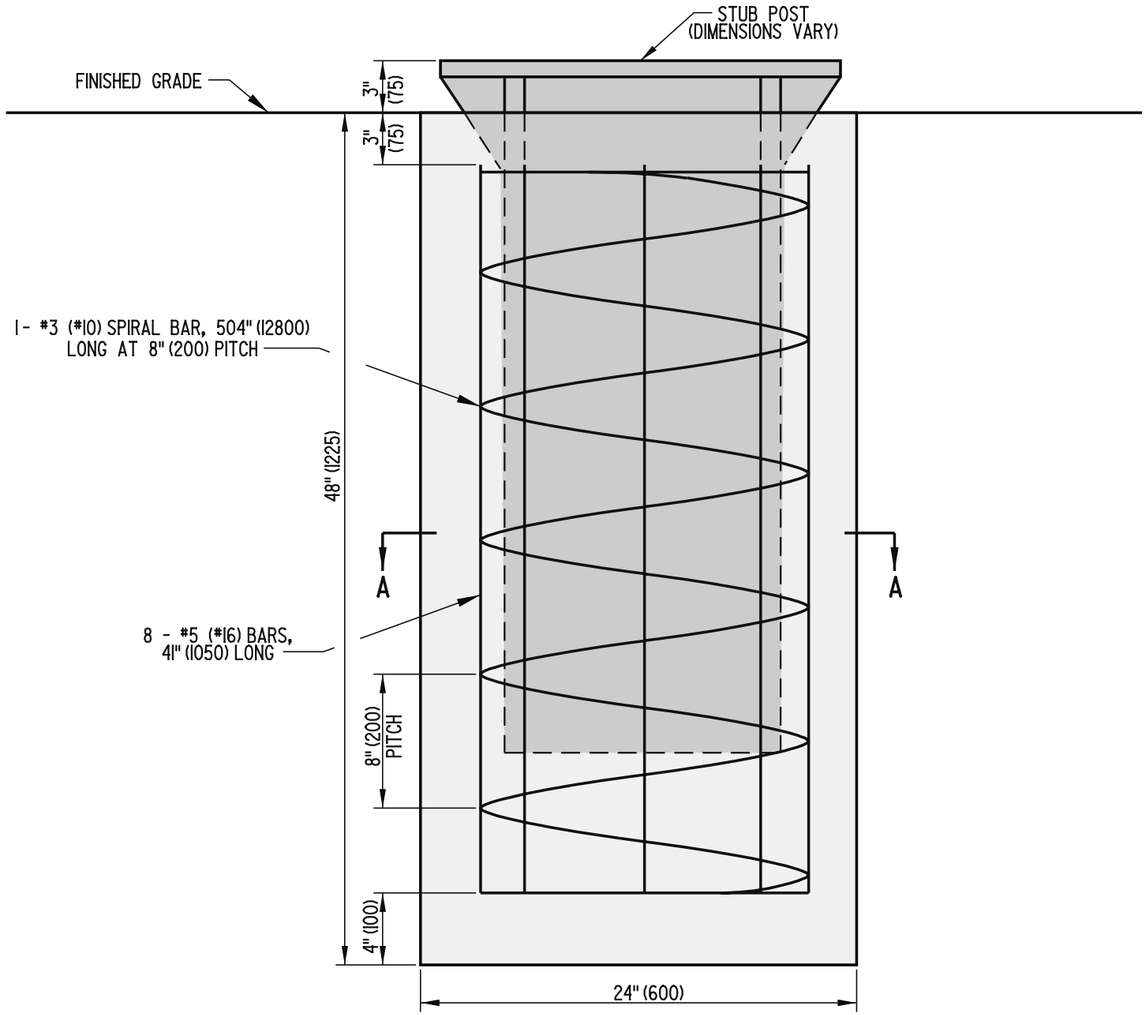

NOTES: 1). STUB POST TO BE SUPPLIED BY THE DEPARTMENTS TRAFFIC, ENGINEERING, AND MANAGEMENT SECTION.

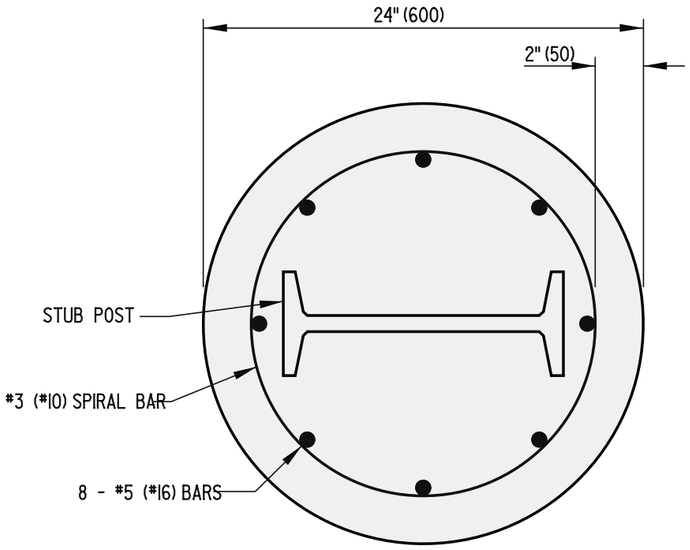

SECTION A-A

DELAWARE
DEPARTMENT OF TRANSPORTATION

SIGN FOUNDATION

STANDARD NO. T-7 (2005) | SHT. 1 OF 1

APPROVED Carolann Wicks CHIEF ENGINEER 12/5/05 DATE

RECOMMENDED James M. O'Neill DESIGN ENGINEER 11/29/05 DATE

09/09/2005

SCALE : N.T.S.

NOTES: 1. THE CONTRACTOR SHALL BE RESPONSIBLE FOR PROTECTING THE CONDUIT AGAINST ANY POSSIBLE DAMAGE IN PAVING OPERATIONS.

2. THE WEATHERPROOF FITTING SHALL CONSIST OF A GALVANIZED 1½" (38) COUPLING CONTAINING A STEEL THREADED REDUCING BUSHING (1½" (38) TO ¾" (19)) AND A ¾" (19) WATERTIGHT CONNECTOR FOR SERVICE ENTRANCE CABLE.

3. THE LEAD-IN WIRE SHALL BE RUN THROUGH THE RUBBER OF THE WEATHERPROOF FITTING.

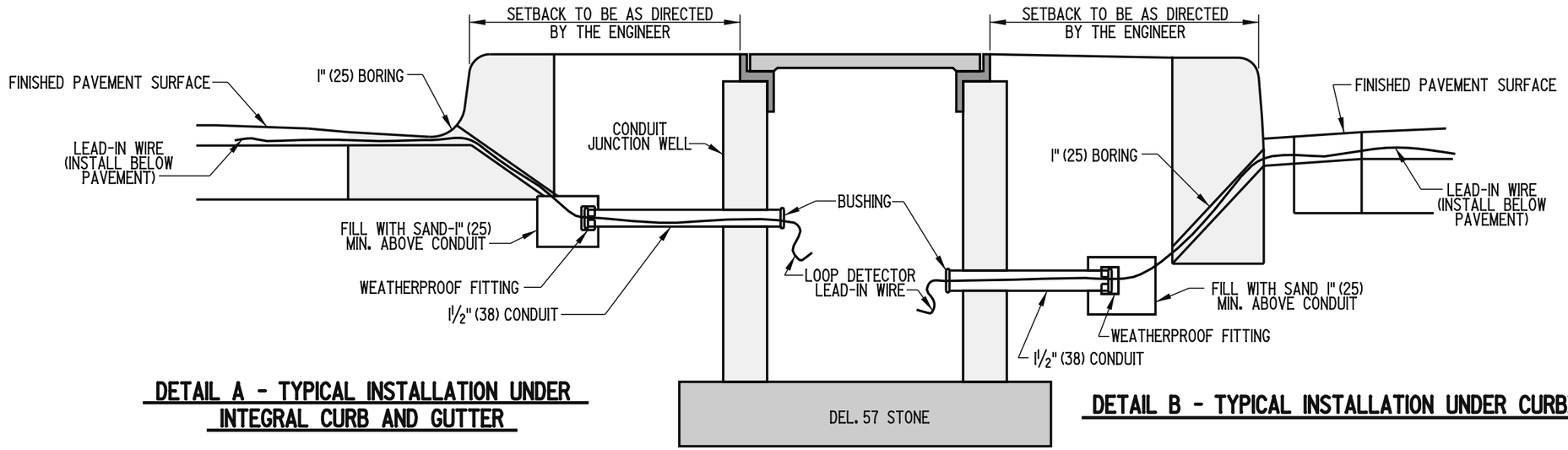

DETAIL A - TYPICAL INSTALLATION UNDER INTEGRAL CURB AND GUTTER

DETAIL B - TYPICAL INSTALLATION UNDER CURBING

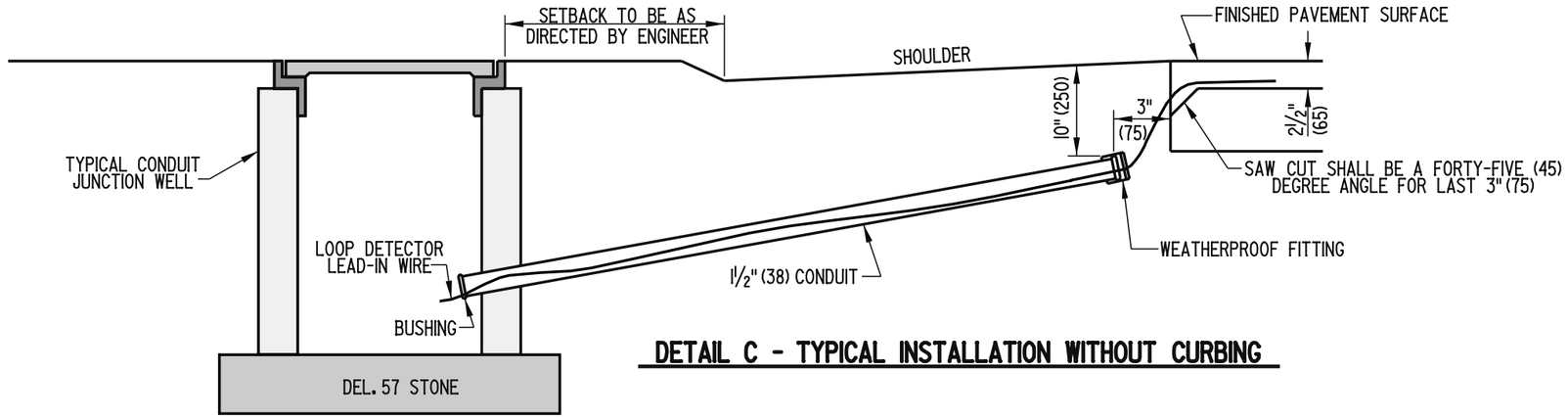

DETAIL C - TYPICAL INSTALLATION WITHOUT CURBING

DELAWARE DEPARTMENT OF TRANSPORTATION	LOOP DETECTOR TO CONDUIT JUNCTION WELL CONNECTION	APPROVED Carolann Wicks CHIEF ENGINEER 12/5/05 DATE
	STANDARD NO. T-8 (2005) SHT. 1 OF 1	RECOMMENDED James M. O'Neill DESIGN ENGINEER 11/29/05 DATE

09/09/2005

SCALE : N.T.S.

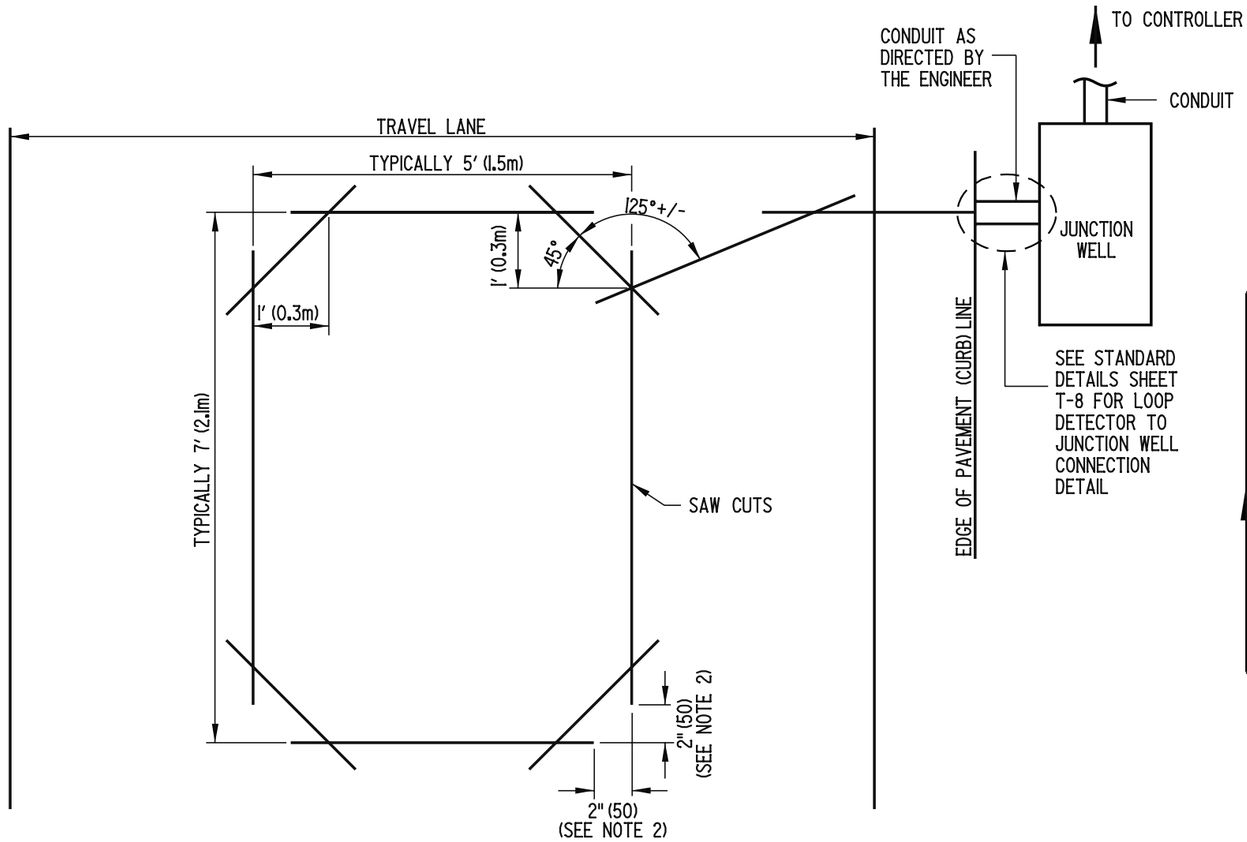

WIRE SLOT CONSTRUCTION

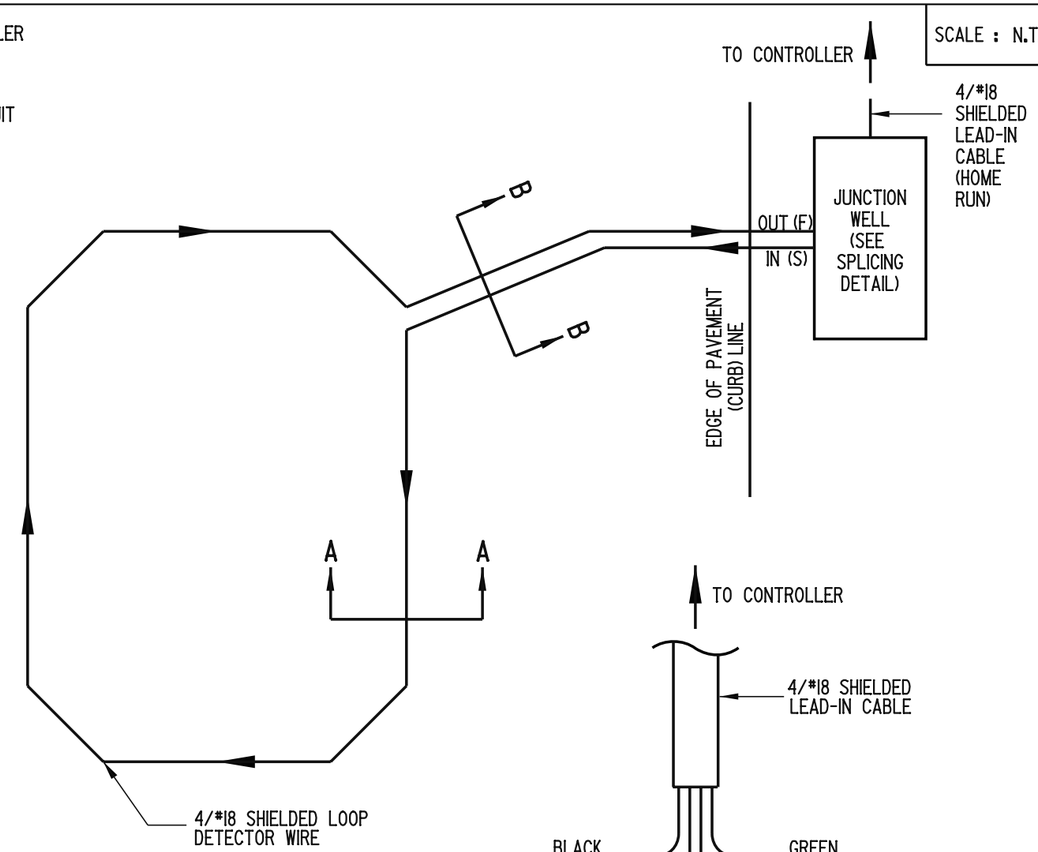

DETAILS FOR INSTALLING LOOP DETECTOR WIRE

(SINGLE WRAP)

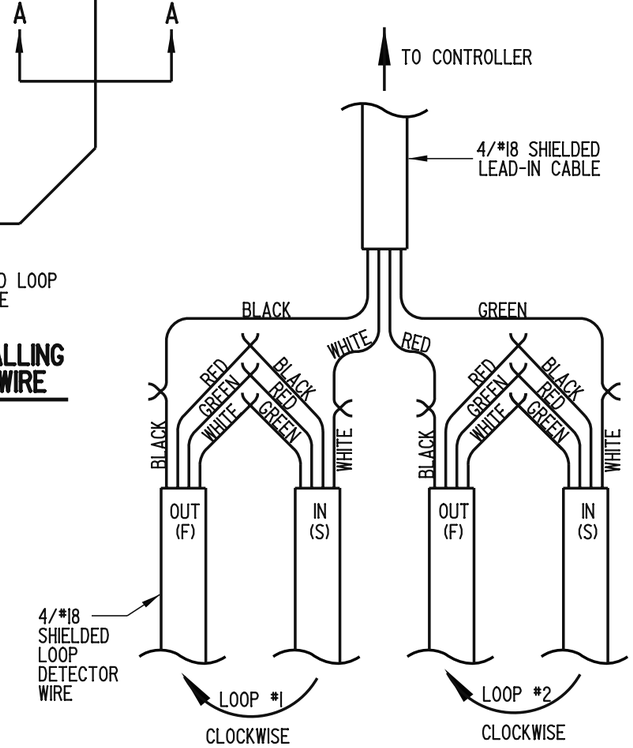

SPLICING DETAIL

(SEE NOTE 3)

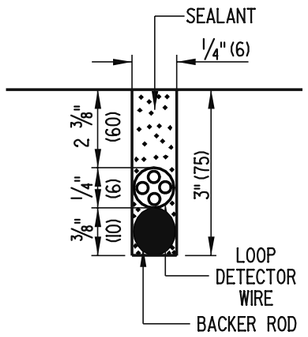

SECTION A - A

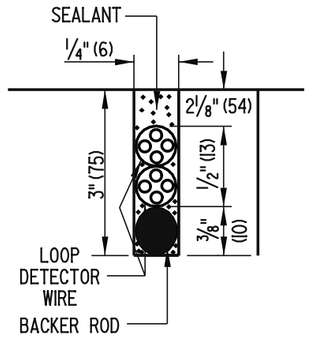

SECTION B - B

NOTES:

1). SAW CUTS FOR WIRE SLOT CONSTRUCTION SHALL BE EXTENDED BEYOND THE CORNERS SO THAT THE SLOT IS FULL DEPTH AT TURN POINTS. A FORTY-FIVE (45) DEGREE ANGLE SHALL BE CUT 12" (300) BACK FROM THE POINT OF THE EXTENDED CORNER.

2). THE LONGITUDINAL / TRANSVERSE CUT SHALL BE STOPPED APPROXIMATELY 2" (50) FROM THE CORNER TO PREVENT THE TRIANGULAR PORTION OF THE PAVEMENT FROM BREAKING.

3). A MAXIMUM OF TWO LOOP DETECTORS CAN BE SPLICED TO ONE LEAD-IN CABLE, THE DETAIL ILLUSTRATES THE METHOD OF SPLICING TWO LOOP DETECTORS (LOOP #1 AND LOOP #2) TO A LEAD-IN CABLE.

4). LOOP DETECTOR SHALL BE CENTERED IN TRAVEL LANE.

DELAWARE DEPARTMENT OF TRANSPORTATION	TYPE #1 LOOP DETECTOR		APPROVED Carolann Wicks (CHIEF ENGINEER) 12/5/05 (DATE)
	STANDARD NO. T-9 (2005)	SHT. 1 OF 1	RECOMMENDED [signature] (DESIGN ENGINEER) 11/29/05 (DATE)

01/19/2006

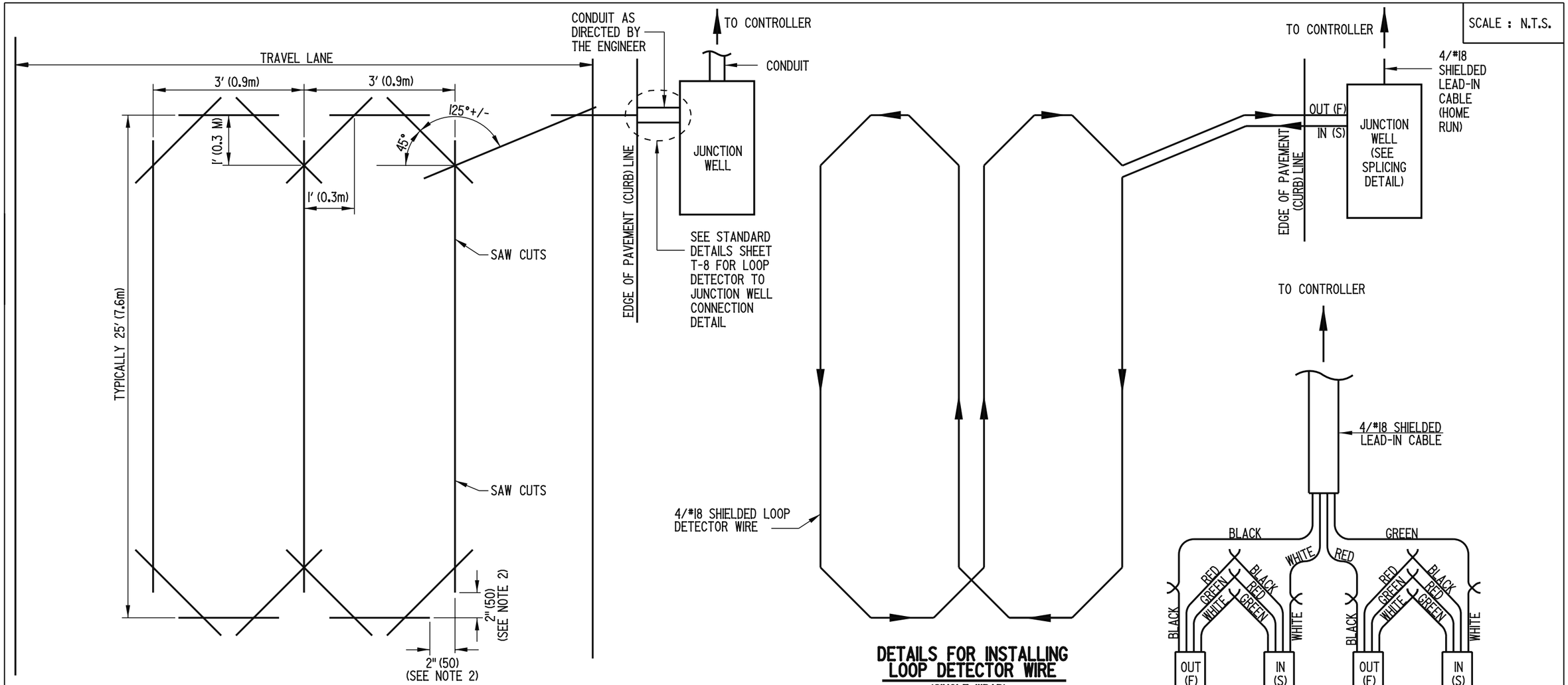

WIRE SLOT CONSTRUCTION

DETAILS FOR INSTALLING LOOP DETECTOR WIRE

(SINGLE WRAP)

SPLICING DETAIL

(SEE NOTE 3)

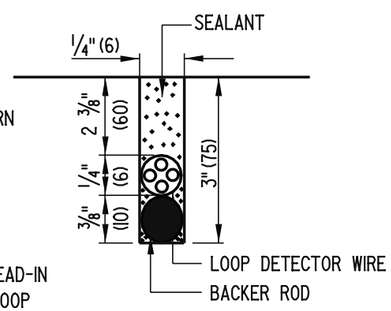

SECTION A - A

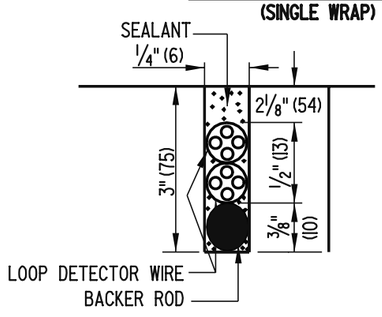

SECTION B - B

NOTES:

1). SAW CUTS FOR WIRE SLOT CONSTRUCTION SHALL BE EXTENDED BEYOND THE CORNERS SO THAT THE SLOT IS FULL DEPTH AT TURN POINTS. A FORTY-FIVE (45) DEGREE ANGLE SHALL BE CUT 1' (0.3m) BACK FROM THE POINT OF THE EXTENDED CORNER.

2). THE LONGITUDINAL / TRANSVERSE CUT SHALL BE STOPPED APPROXIMATELY 2" (50) FROM THE CORNER TO PREVENT THE TRIANGULAR PORTION OF THE PAVEMENT FROM BREAKING.

3). A MAXIMUM OF TWO LOOP DETECTORS CAN BE SPLICED TO ONE LEAD-IN CABLE. THE DETAIL ILLUSTRATES THE METHOD OF SPLICING TWO LOOP DETECTORS (LOOP #1 AND LOOP #2) TO A LEAD-IN CABLE.

4). LOOP DETECTOR SHALL BE CENTERED IN TRAVEL LANE.

DELAWARE DEPARTMENT OF TRANSPORTATION	TYPE #2 LOOP DETECTOR		APPROVED Carolann Wicks (CHIEF ENGINEER) 12/5/05 (DATE)
	STANDARD NO. T-10 (2005)	SHT. 1 OF 1	RECOMMENDED [signature] (DESIGN ENGINEER) 11/29/05 (DATE)

01/19/2006

SCALE : N.T.S.

INTERMEDIATE

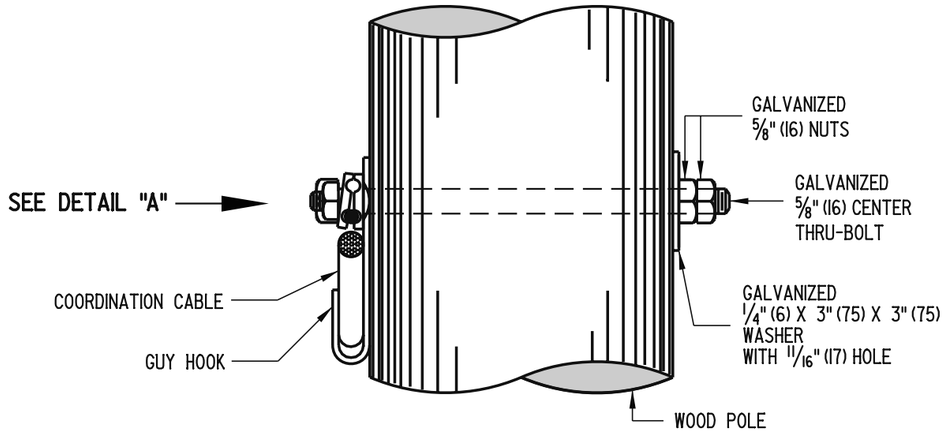

SIDE VIEW

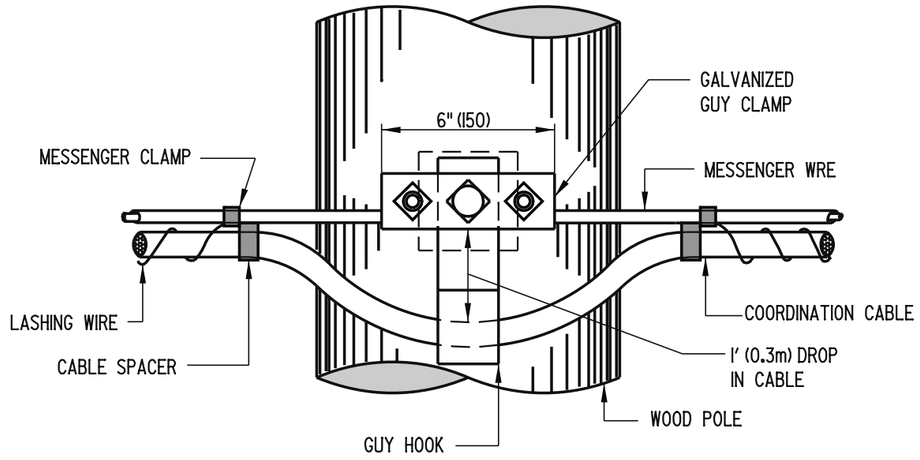

FRONT VIEW

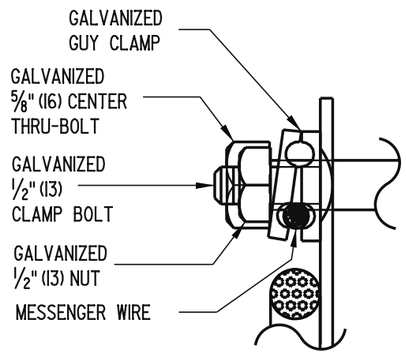

DETAIL "A"

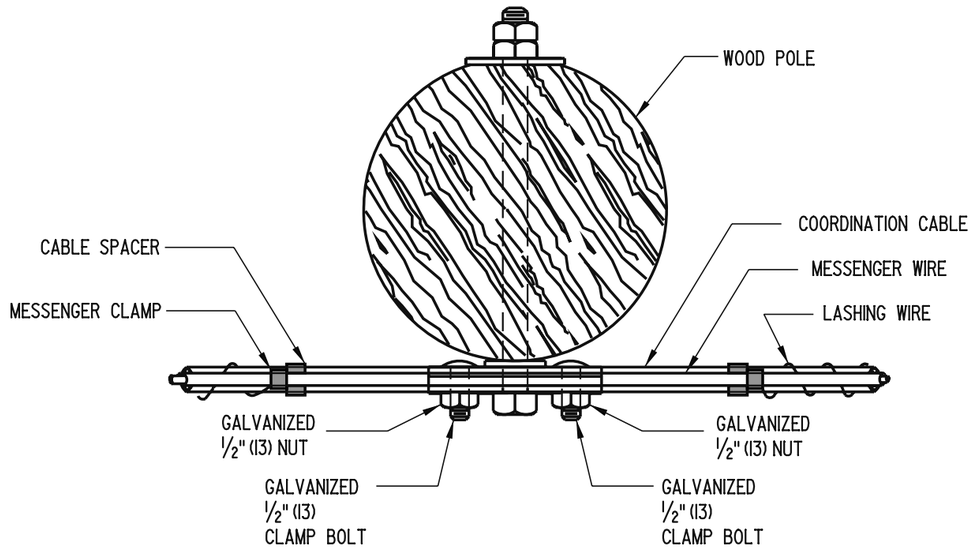

TOP VIEW

DELAWARE DEPARTMENT OF TRANSPORTATION	INTERMEDIATE MESSENGER WIRE ATTACHMENT ON WOOD POLES		APPROVED Carolann Wicks CHIEF ENGINEER 12/5/05 DATE
	STANDARD NO. T-11 (2005)	SHT. 1 OF 2	RECOMMENDED [signature] DESIGN ENGINEER 11/29/05 DATE

09/09/2005

SCALE : N.T.S.

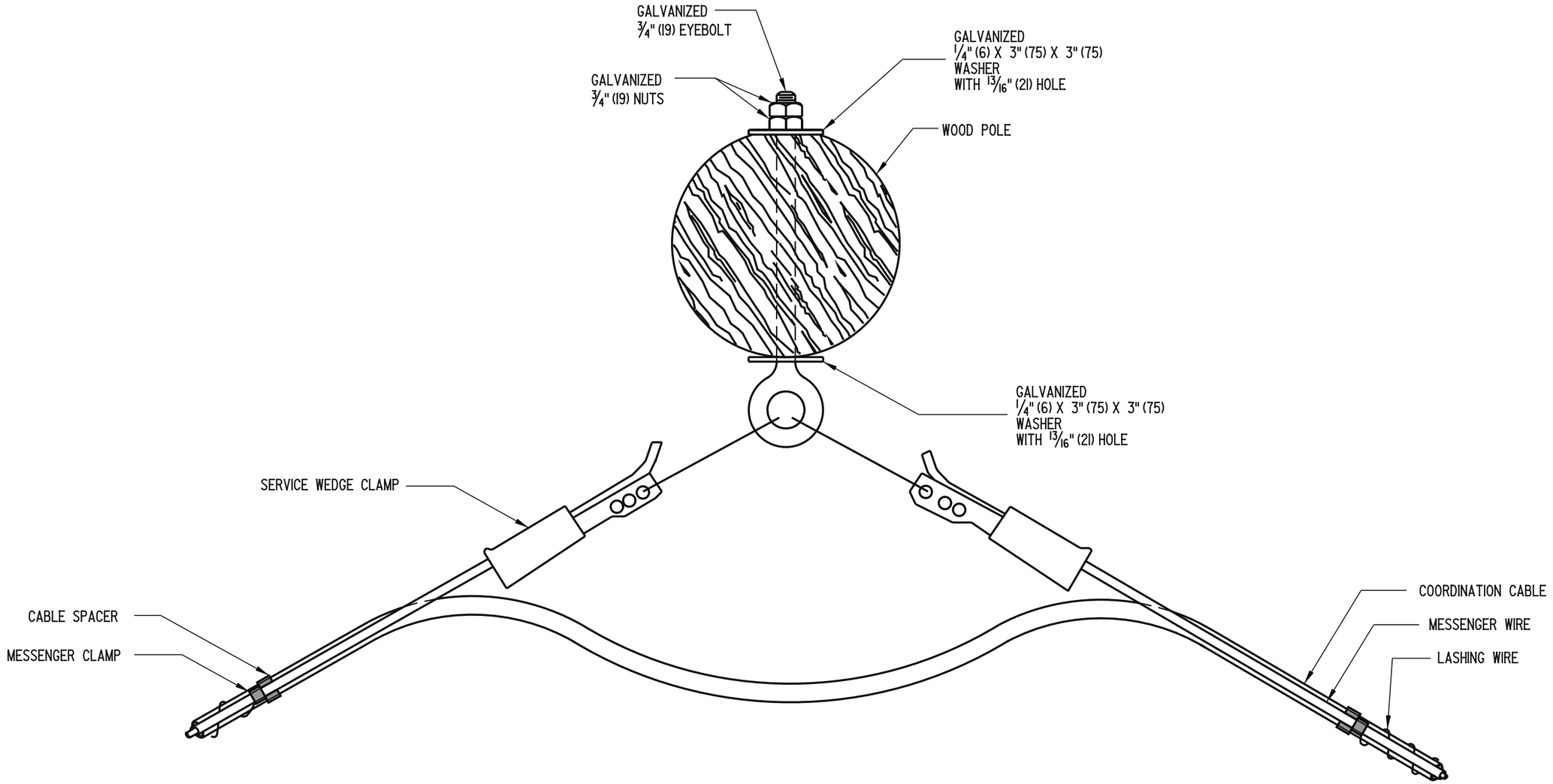

TOP VIEW

DELAWARE DEPARTMENT OF TRANSPORTATION	ANGULAR INTERMEDIATE MESSENGER WIRE ATTACHMENT		APPROVED Carolann Wicks CHIEF ENGINEER 12/5/05 DATE
	STANDARD NO. T-11 (2005)	SHT. 2 OF 2	RECOMMENDED DESIGN ENGINEER 11/29/05 DATE

09/27/2004

SCALE : N.T.S.

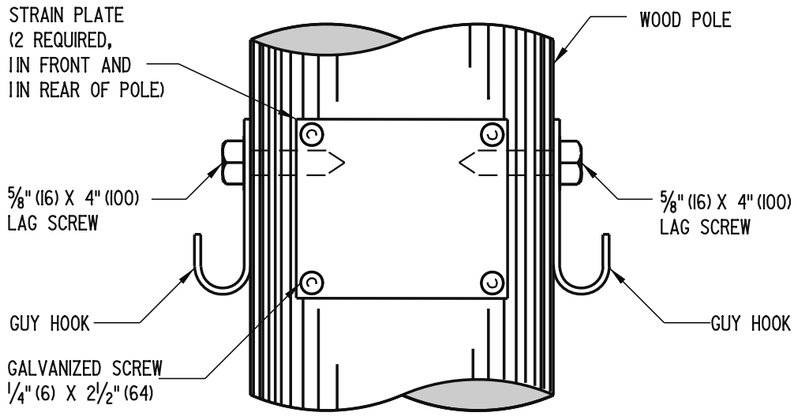

FRONT VIEW
(SPAN WIRE NOT SHOWN)

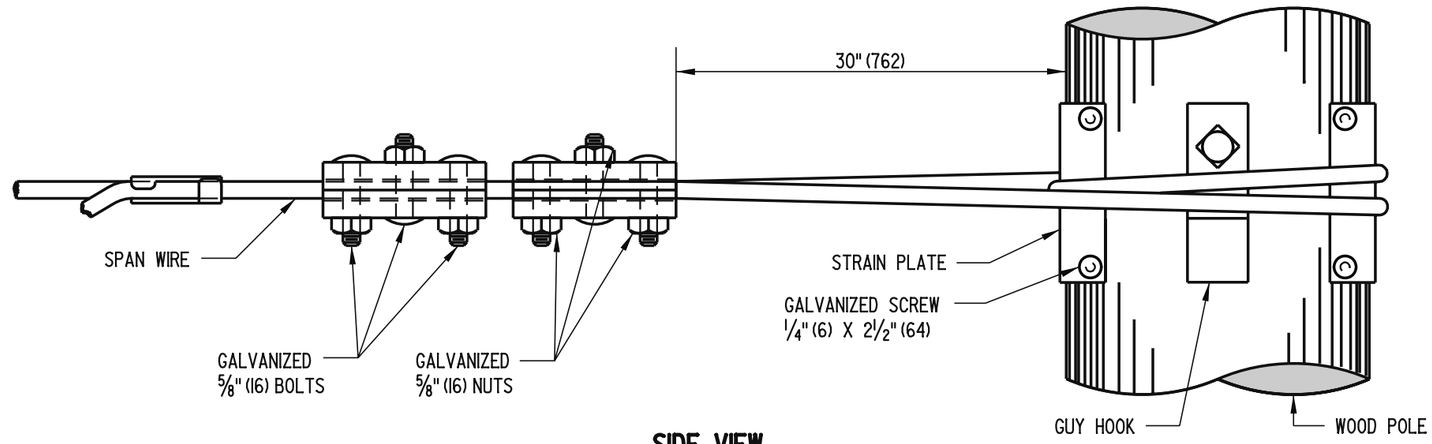

SIDE VIEW

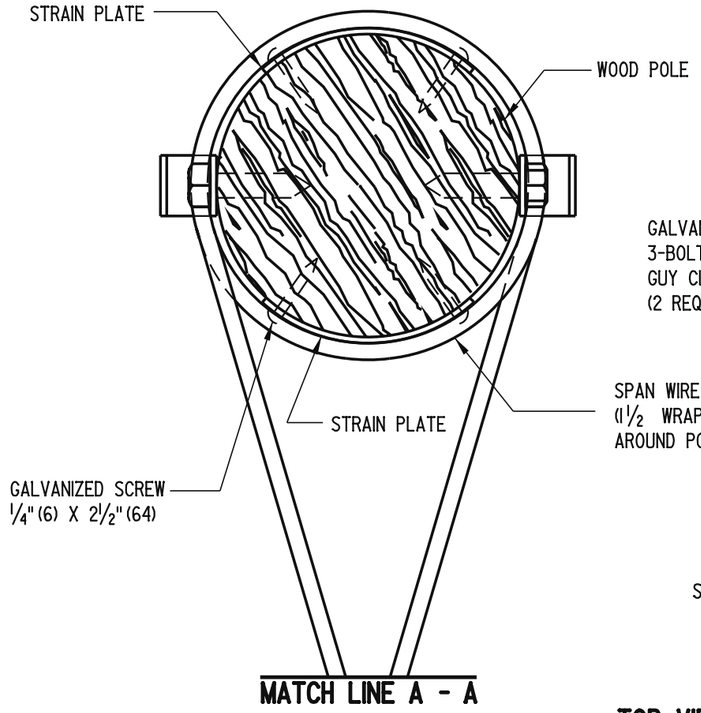

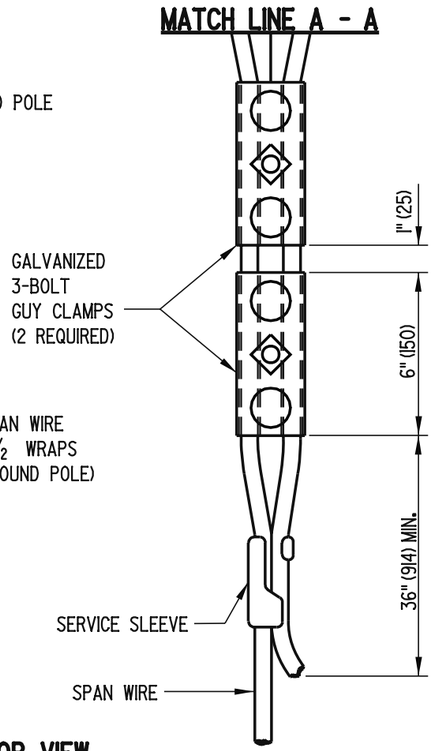

TOP VIEW

NOTE: SPAN WIRE ATTACHMENT BETWEEN METAL POLES IS THE SAME AS SHOWN FOR WOOD POLES EXCEPT THAT THE STRAIN PLATES AND GUY HOOKS ARE NOT USED. FOR DETAIL SEE T-14 SHEET 2 - "DEAD END MESSENGER WIRE ATTACHMENT, METAL POLES ".

DELAWARE DEPARTMENT OF TRANSPORTATION	SPAN WIRE ATTACHMENT BETWEEN POLES	APPROVED Carolann Wicks (CHIEF ENGINEER) 12/5/05 (DATE)
	STANDARD NO. T-12 (2005) SHT. 1 OF 2	RECOMMENDED (DESIGN ENGINEER) 11/29/05 (DATE)

09/09/2005

SCALE : N.T.S.

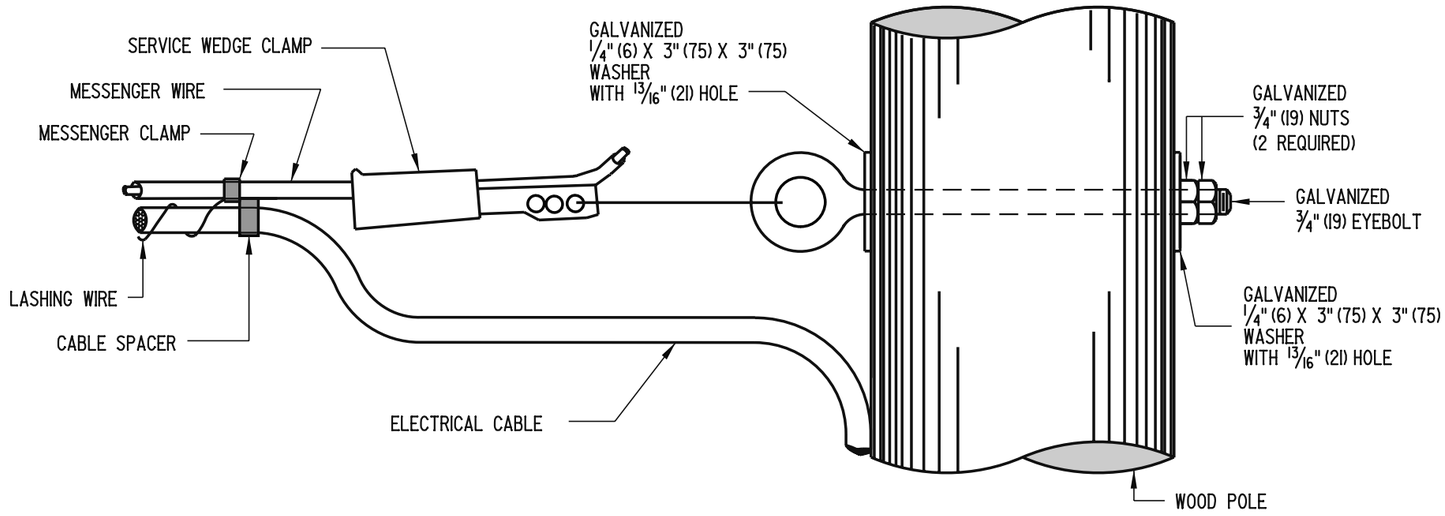

WOOD POLES

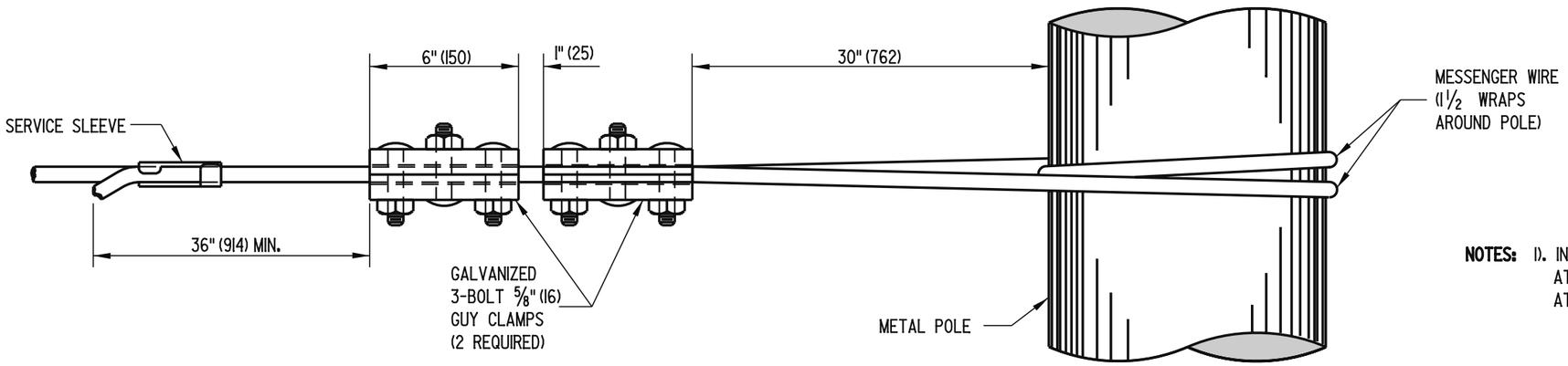

NOTES: 1). INSTALLATION METHOD SHOWN FOR DEAD END MESSENGER WIRE ATTACHMENT TO METAL POLES SHALL BE USED FOR SPAN WIRE ATTACHMENT BETWEEN METAL POLES.

METAL POLES

DELAWARE DEPARTMENT OF TRANSPORTATION	DEAD END MESSENGER WIRE ATTACHMENT		APPROVED Carolann Wicks CHIEF ENGINEER 12/5/05 DATE
	STANDARD NO. T-12 (2005)	SHT. 2 OF 2	RECOMMENDED James M. Ojdana DESIGN ENGINEER 11/29/05 DATE

09/09/2005

SCALE : N.T.S.

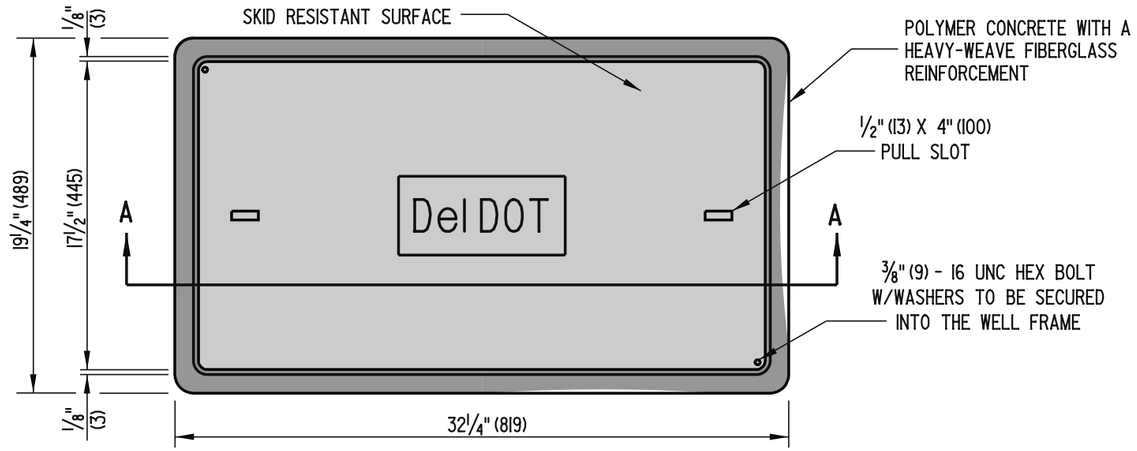

PLAN VIEW

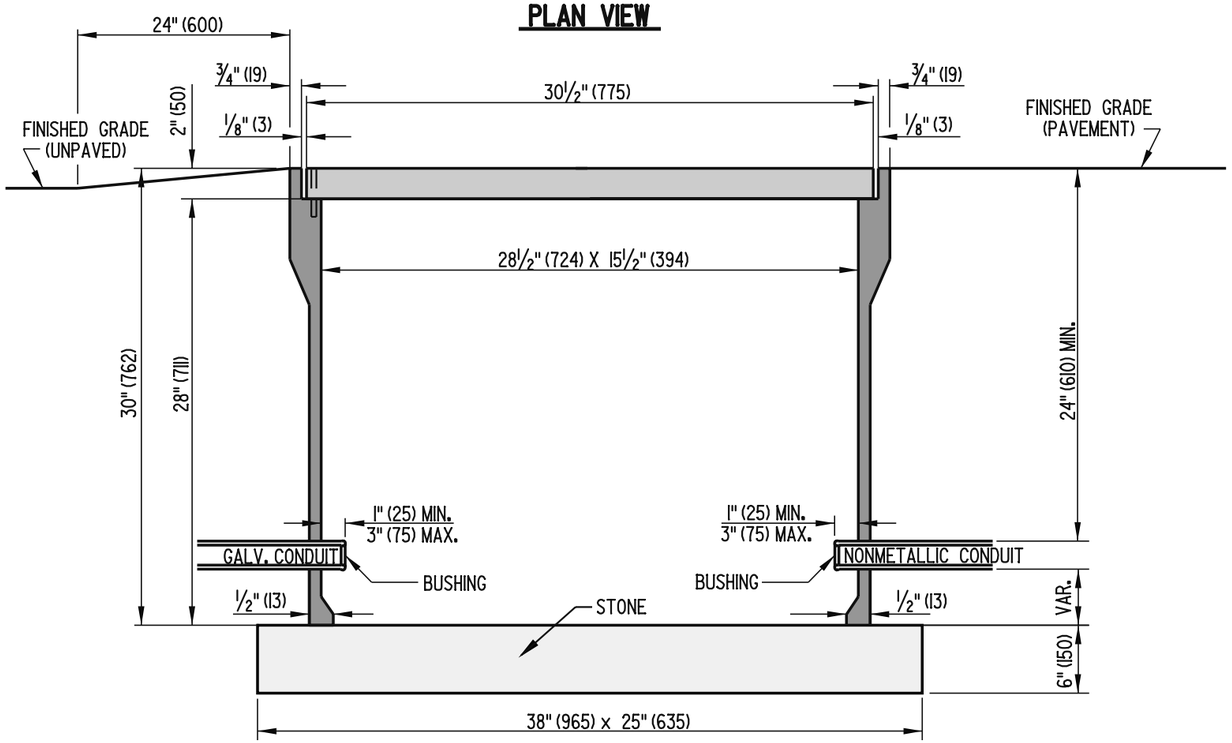

SECTION A-A

NOTES:

1). TYPE 6 CONDUIT JUNCTION WELL SHALL BE PRECAST POLYMER CONCRETE.

2). ALL CONDUIT JUNCTION WELLS CONSTRUCTED WITHIN PAVEMENT, SIDEWALKS, ETC. WILL BE CONSTRUCTED FLUSH WITH THE SURFACE OF THE SAME. INSTALLATION IN UNPAVED AREAS WILL BE CONSTRUCTED ABOVE GRADE AND GRADED TO DRAIN AWAY FROM THE CONDUIT JUNCTION WELL.

3). POLYMER CONCRETE COVERS SHALL BE THE HEAVY-DUTY TYPE WITH A DESIGN LOAD OF 15,000 LBS (6800 kg) OVER A 10" (255) SQUARE.

DELAWARE DEPARTMENT OF TRANSPORTATION	CONDUIT JUNCTION WELL, TYPE 6		APPROVED Carolann Wicks CHIEF ENGINEER 12/5/05 DATE
	STANDARD NO. T-13 (2005)	SHT. 1 OF 3	RECOMMENDED [signature] DESIGN ENGINEER 11/29/05 DATE

01/19/2006

SCALE : N.T.S.

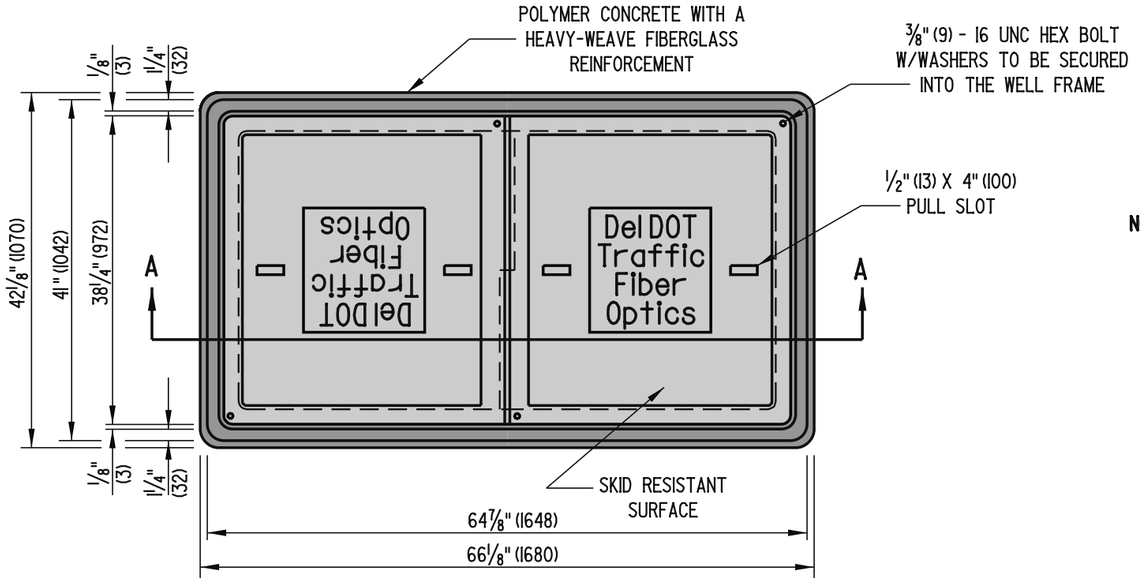

PLAN VIEW

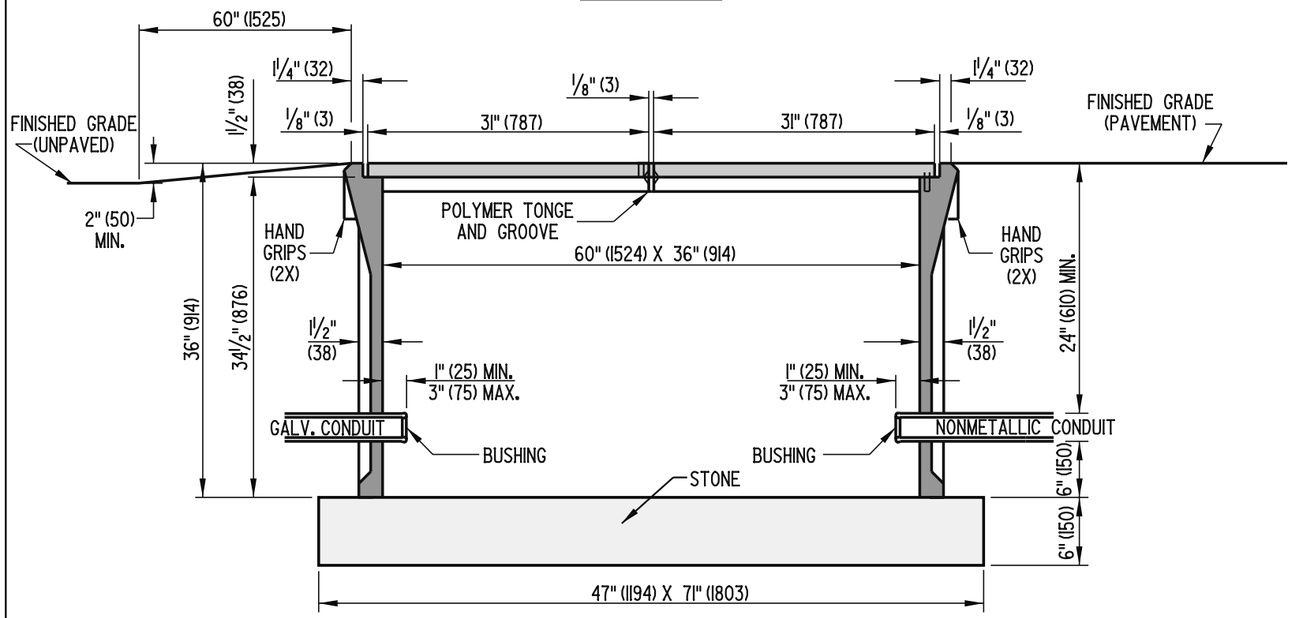

SECTION A-A

NOTES:

1). TYPE 7 CONDUIT JUNCTION WELL SHALL BE PRECAST POLYMER CONCRETE.

2). ALL CONDUIT JUNCTION WELLS CONSTRUCTED WITHIN PAVEMENT, SIDEWALKS, ETC. WILL BE CONSTRUCTED FLUSH WITH THE SURFACE OF THE SAME. INSTALLATION IN UNPAVED AREAS WILL BE CONSTRUCTED ABOVE GRADE AND GRADED TO DRAIN AWAY FROM THE CONDUIT JUNCTION WELL.

3). POLYMER CONCRETE COVERS SHALL BE THE HEAVY DUTY TYPE WITH A DESIGN LOAD OF 15,000 LBS (6800 kg) OVER A 10" (255) SQUARE.

DELAWARE DEPARTMENT OF TRANSPORTATION	CONDUIT JUNCTION WELL, TYPE 7		APPROVED CHIEF ENGINEER — DATE 10/10/06
	STANDARD NO. T-13 (2006)	SHT. 2 OF 3	RECOMMENDED DESIGN ENGINEER — DATE 10/9/06

05/13/2006

SCALE : N.T.S.

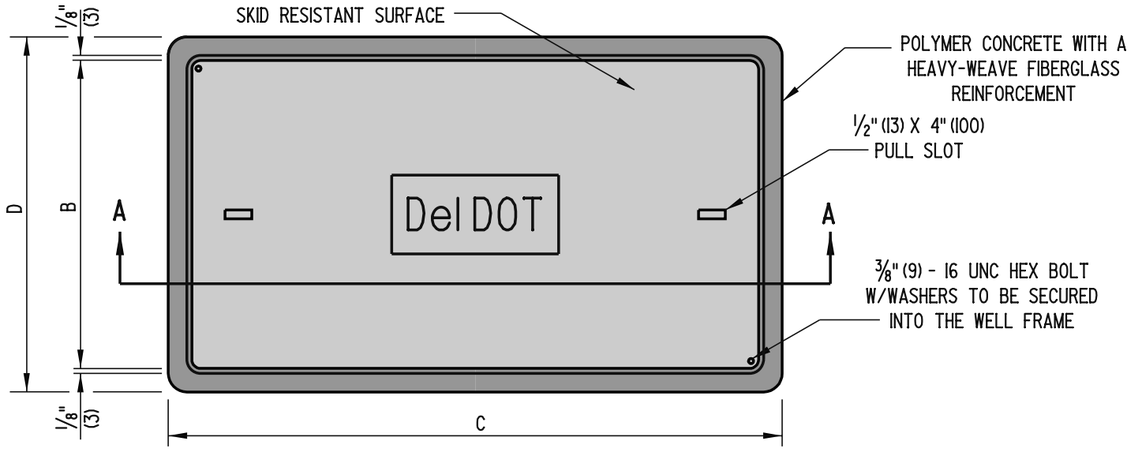

PLAN VIEW

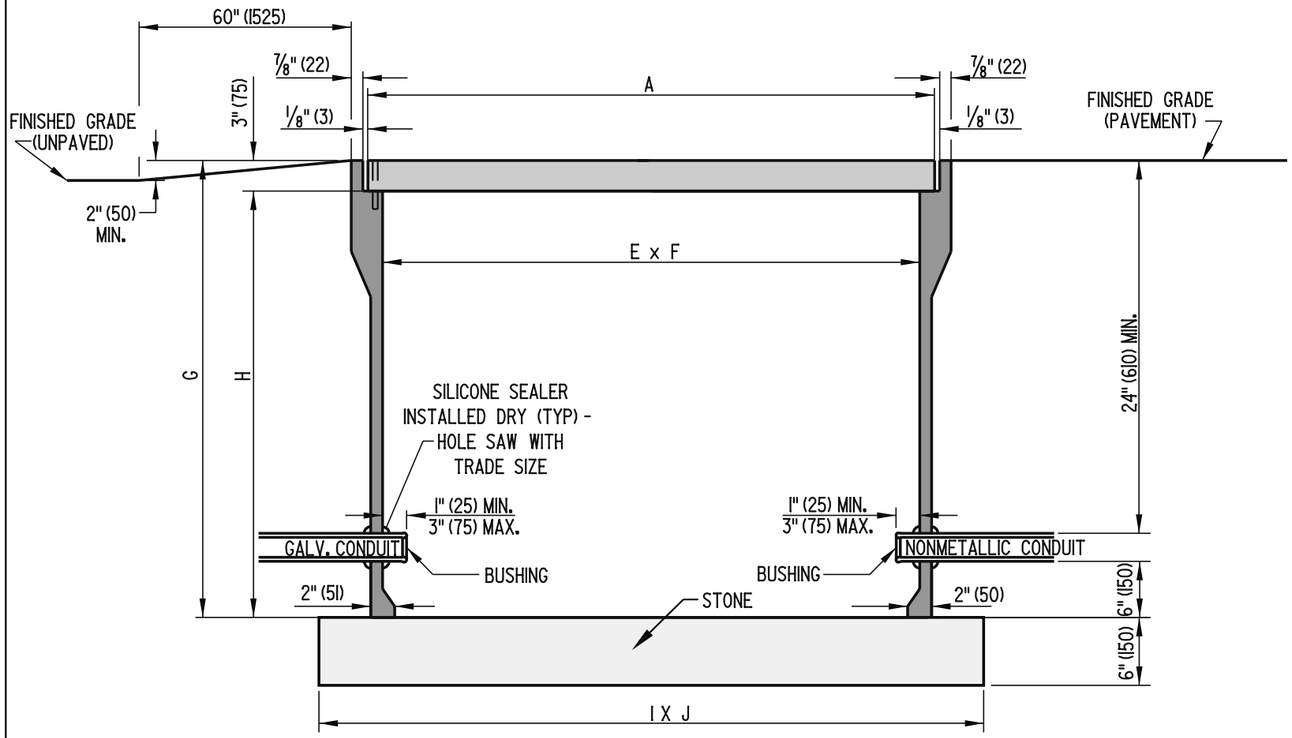

SECTION A-A

NOTES:

1). TYPES 8 & 10 CONDUIT JUNCTION WELLS SHALL BE PRECAST POLYMER CONCRETE.

2). ALL CONDUIT JUNCTION WELLS CONSTRUCTED WITHIN PAVEMENT, SIDEWALKS, ETC. WILL BE CONSTRUCTED FLUSH WITH THE SURFACE OF THE SAME. INSTALLATION IN UNPAVED AREAS WILL BE CONSTRUCTED ABOVE GRADE AND GRADED TO DRAIN AWAY FROM THE CONDUIT JUNCTION WELL.

3). POLYMER CONCRETE COVERS SHALL BE THE HEAVY-DUTY TYPE WITH A DESIGN LOAD OF 15,000 LBS (6800 kg) OVER A 10" (255) SQUARE.

DIMENSIONS		TYPE 8	TYPE 10
COVER	A	47 5/8" (1210)	35 5/8" (905)
	B	30 1/8" (765)	24" (610)
FRAME	C	49 5/8" (1261)	37 5/8" (956)
	D	32 1/8" (816)	26" (660)
	E	45 5/8" (1159)	33 7/8" (860)
	F	28 1/8" (714)	22 1/4" (565)
	G	36" (914)	30" (1067)
	H	33" (838)	27" (991)
BASE	I	58" (1473)	46" (1168)
	J	40" (1016)	34" (864)

DELAWARE
DEPARTMENT OF TRANSPORTATION

CONDUIT JUNCTION WELLS, TYPES 8 & 10

STANDARD NO. T-13 (2006) | SHT. 3 OF 3

APPROVED _____ CHIEF ENGINEER DATE 10/10/06

RECOMMENDED _____ DESIGN ENGINEER DATE 10/3/06

05/13/2006

SCALE : N.T.S.

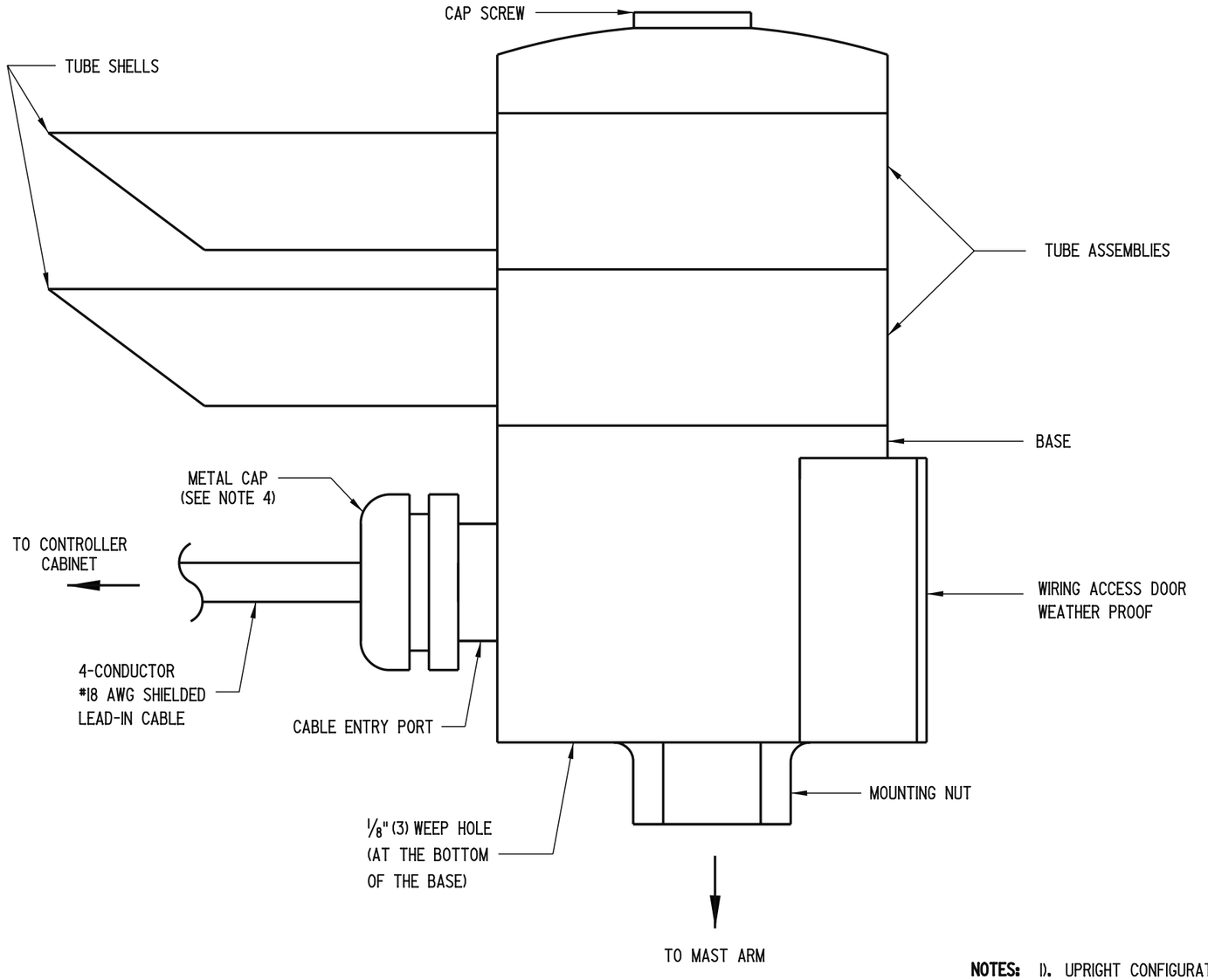

SIDE VIEW

CABLE CONNECTIONS TO TERMINAL STRIP

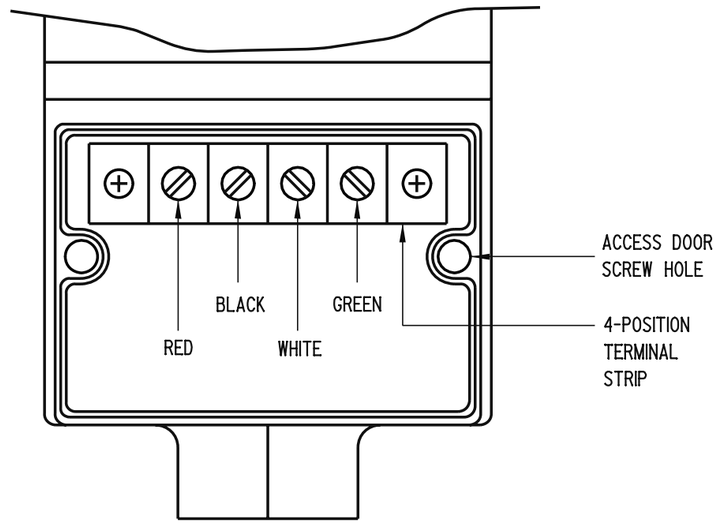

FRONT VIEW
(CABLE IS NOT SHOWN)

NOTES:
1). UPRIGHT CONFIGURATION SHALL BE USED FOR MOUNTING ON MAST ARMS, SIGNAL HEAD FRAMEWORKS AND PEDESTALS.
2). UPRIGHT MOUNTING HARDWARE SHALL BE SUPPLIED BY THE DEPARTMENT.
3). TEFLON TAPE SHALL BE APPLIED TO THREADS BEFORE MOUNTING.
4). ROUTE THE LEAD-IN CABLE THROUGH THE METAL CAP AND THE RUBBER PLUG. REPLACE THE METAL CAP, SEALING THE CABLE ENTRY PORT. TIGHTEN THE METAL CAP SO THE CABLE WILL NOT SLIDE THROUGH THE RUBBER PLUG.

DELAWARE DEPARTMENT OF TRANSPORTATION	EMERGENCY PREEMPTION RECEIVER, UPRIGHT MOUNT		APPROVED CHIEF ENGINEER	DATE 10/10/06
	STANDARD NO. T-14 (2006)	SHT. 1 OF 2	RECOMMENDED DESIGN ENGINEER	DATE 10/3/06

06/27/2006

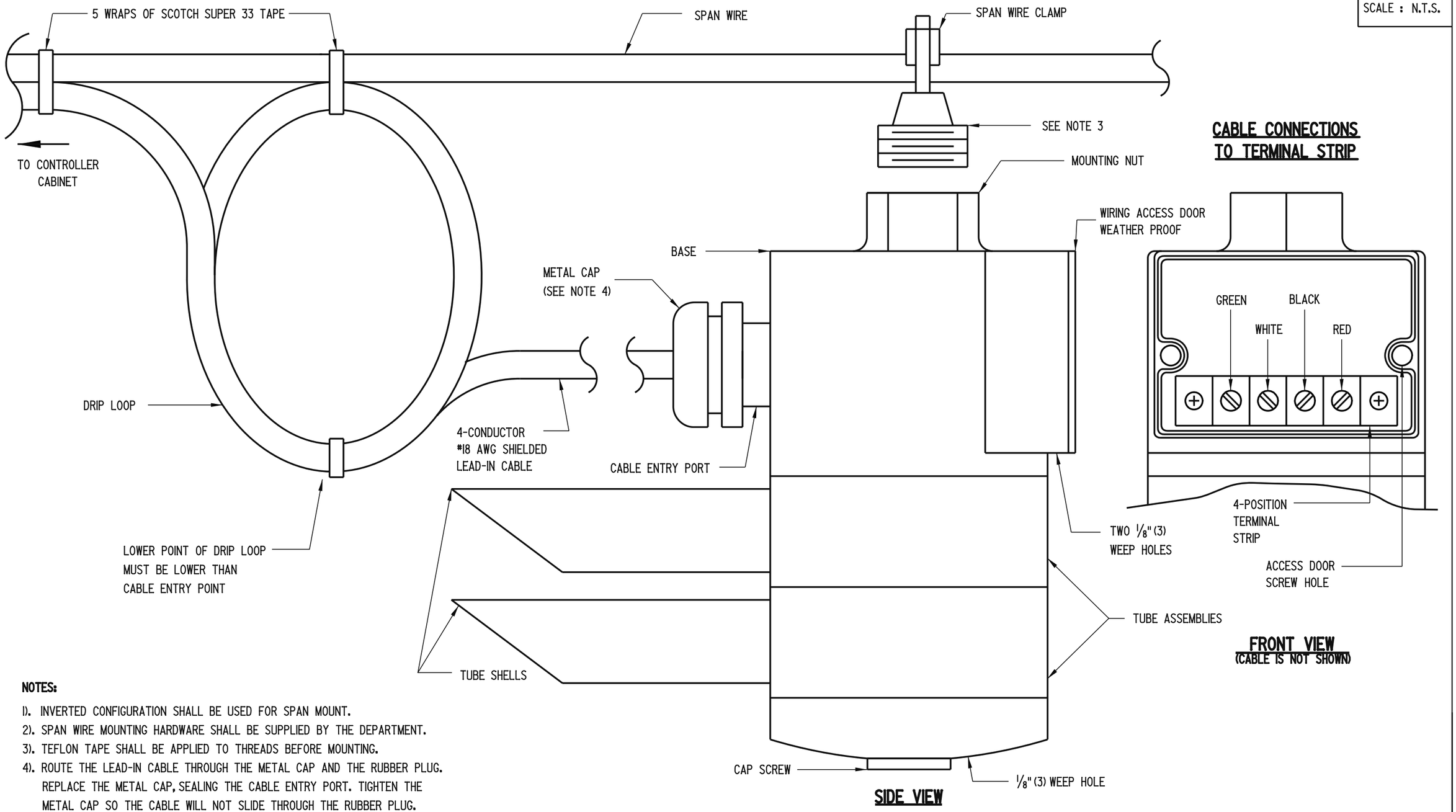

NOTES:

1). INVERTED CONFIGURATION SHALL BE USED FOR SPAN MOUNT.
2). SPAN WIRE MOUNTING HARDWARE SHALL BE SUPPLIED BY THE DEPARTMENT.
3). TEFLON TAPE SHALL BE APPLIED TO THREADS BEFORE MOUNTING.
4). ROUTE THE LEAD-IN CABLE THROUGH THE METAL CAP AND THE RUBBER PLUG. REPLACE THE METAL CAP, SEALING THE CABLE ENTRY PORT. TIGHTEN THE METAL CAP SO THE CABLE WILL NOT SLIDE THROUGH THE RUBBER PLUG.

DELAWARE DEPARTMENT OF TRANSPORTATION	EMERGENCY PREEMPTION RECEIVER, INVERTED MOUNT		APPROVED Carolann Wicks CHIEF ENGINEER 12/5/05 DATE
	STANDARD NO. T-14 (2005)	SHT. 2 OF 2	RECOMMENDED [signature] DESIGN ENGINEER 11/29/05 DATE

09/09/2005

SCALE : N.T.S.

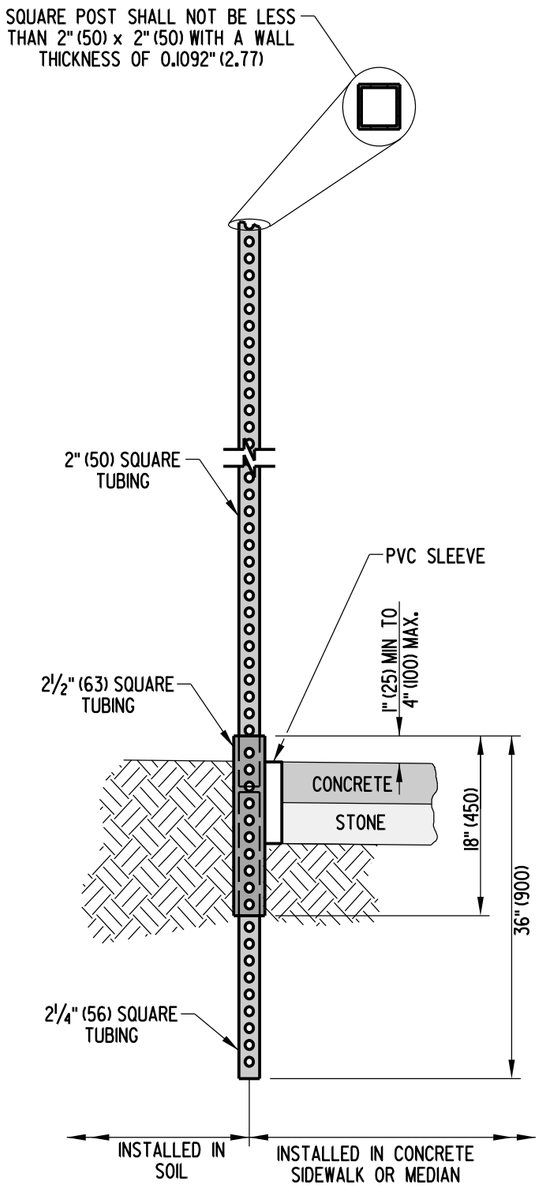

BREAK-AWAY ASSEMBLY

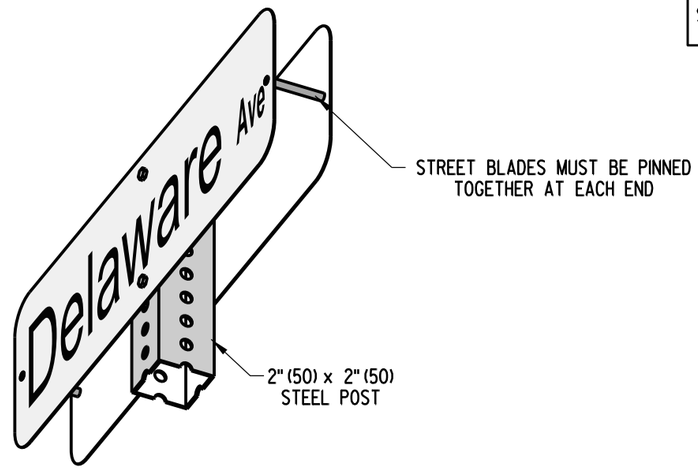

TYPICAL ASSEMBLY

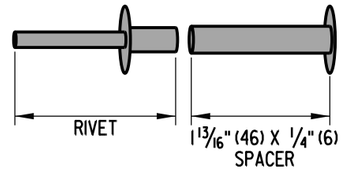

PIN ASSEMBLY

NOTE: THE PIN ASSEMBLY IS TO BE USED WITH THE INSTALLATION OF BACK TO BACK STREET BLADE SIGNS WITH 6" (150) LETTERS.

NOTES:

1). SQUARE TUBES ARE TO BE FORMED FROM GALVANIZED SHEET STRUCTURAL (PHYSICAL) QUALITY, ASTM A 446, GRADE A, COATING DESIGNATION G 90, REGULAR SPANGLE, OR HOT ROLLED CARBON SHEET STEEL STRUCTURAL (PHYSICAL) QUALITY, ASTM A 57, GRADE 33.

2). NOMINAL OUTSIDE DIMENSIONS ARE AS FOLLOWS;
   A). 2" (50) x 2" (50) +/- 0.008
   2¼" (56) x 2¼" (56) +/- 0.010
   2½" (63) x 2½" (63) +/- 0.010

3). ALL FOUR SIDES ARE TO HAVE EVENLY SPACED 7/16" (12) DIAMETER HOLES ON 1" (25) CENTERS THE ENTIRE LENGTH OF THE TUBE.

4). STANDARD CORNER RADIUS SHALL BE 5/32" (4).

5). THE FASTENERS TO BE SUPPLIED UNDER THIS SPECIFICATION SHALL BE 5/16" (8), GRADE 5 UNC CORNER BOLTS WITH CADMIUM OR ZINC PLATING. INSTALLATION OF SIGNS SHALL BE WITH 3/8" (10) x 2½" (63) BOLT WITH LOCKNUT AND WASHER.

6). THE CONTRACTOR SHALL PROVIDE AND INSTALL PVC SLEEVES (4" (100) INSIDE DIAMETER MINIMUM, 6" (150) INSIDE DIAMETER MAXIMUM) IN PROPOSED CONCRETE SIDEWALKS, ISLANDS, AND MEDIANS FOR FUTURE TRAFFIC SIGN POSTS AS DIRECTED BY THE ENGINEER. THE LOWER END OF THE SLEEVE SHALL BE SET ON TOP OF THE SOIL.

DELAWARE
DEPARTMENT OF TRANSPORTATION

BREAKWAY SIGN POST AND PIN ASSEMBLY DETAILS

STANDARD NO. T-15 (2009) | **SHT. 1 OF 1**

APPROVED SIGNATURE ON FILE — CHIEF ENGINEER — 01/19/2010 — DATE

RECOMMENDED SIGNATURE ON FILE — DESIGN ENGINEER — 01/14/2010 — DATE

01/08/2010